Laser Marking Parameters			
Area	Description	Marking	Molded (M) Laser Etch (L)
01	Manufacturer	Continental	M
02	Material	>PA6-12 GF33<	M
03	Visual Code	XXXXX	L
04	Frequency Code	433MHz	L
05	ATIC ID Number	XXXXXXXX	L
06	Data Matrix	Data Matrix Code	L
07	Customer Marking	Chrysler	L
08	Customer Product Reference	68252493AA	L
09	Housing Cavity ID	X	M
10	Date Code	YYMMDD	L
11	Continental Material Number	A2C98012900	L
12	Homologation Canada	IC:7812D-TIS03	L
13	Homologation US	FCC ID:KR5TIS-03	L
14	Cover Cavity ID	XX	M
15	Recycling	LOGO	M
16	Spring Clip Marking	PRESS	
17	Supplier Date Code Area:	DDD YY xxxxx	L
18	Homologation Korea	TBD	L
19	Software version	131 ::	L
20	Homologation Model Number	MN:TIS-03	L

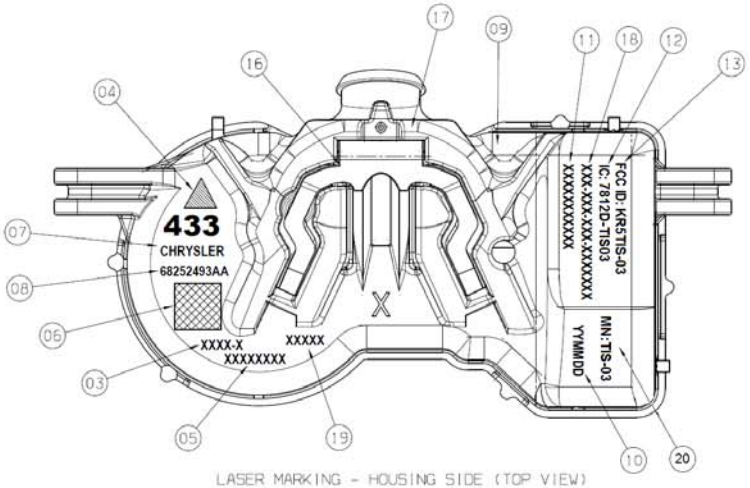

LASER MARKING - HOUSING SIDE (TOP VIEW)
SCALE 4:1

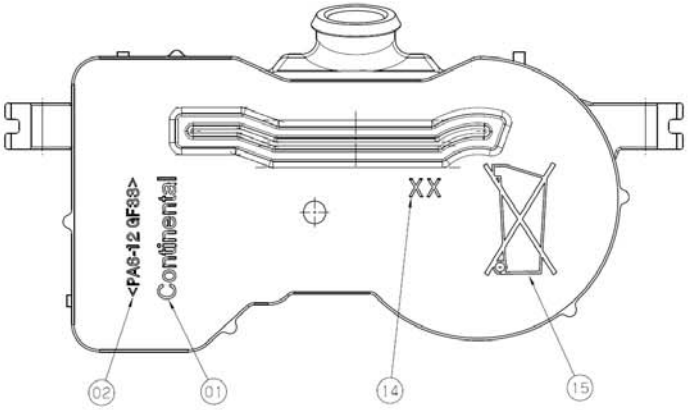

LASER MARKING - COVER SIDE (BOTTOM VIEW)
SCALE 4:1