LTR	DESCRIPTION	CS#	REL#	DATE	APR
A	PSO – Added Q503, DTC114EUA Transistor				
B	Added Res. R524				

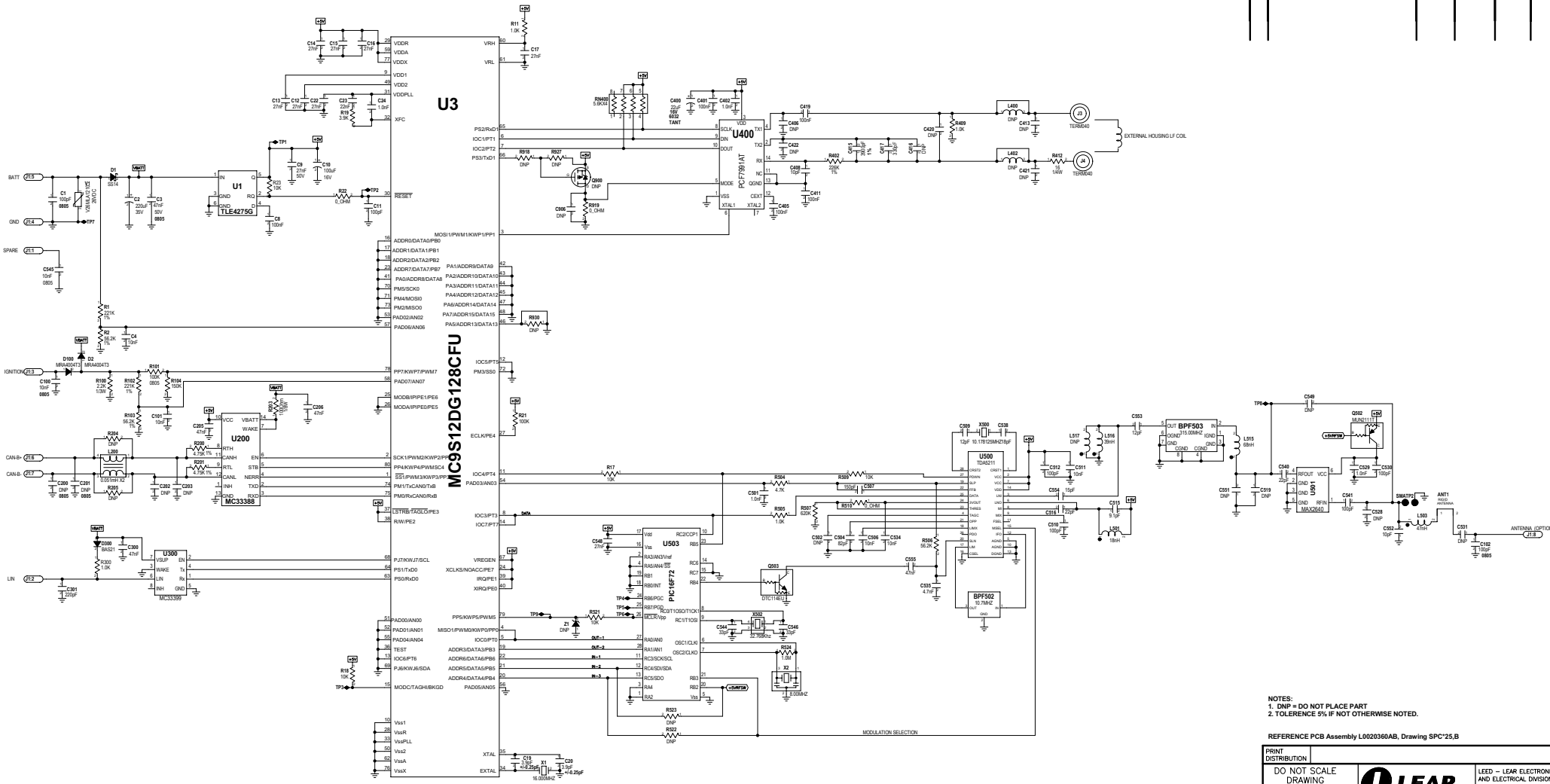

NOTES:
1. DNP = DO NOT PLACE PART
2. TOLERENCE 5% IF NOT OTHERWISE NOTED.

REFERENCE PCB Assembly L0020360AB, Drawing SPC"25,B

PRINT DISTRIBUTION	
DO NOT SCALE DRAWING	LEAR CORPORATION — LEED – LEAR ELECTRONICS AND ELECTRICAL DIVISION, 5200 AUTO CLUB DRIVE, DEARBORN, MICHIGAN 48126
DATE: 2/01/02	
DRAWN: J. BATTISTELLA	TITLE
APPROVED:	NA SKIM+RKE+LIN TPM SCHEMATIC RECEIVER–WCM DCX LX, HB and WK 2005
APPROVED:	
FILENAME: SPC000000000062,B,1.sch	

LAST UPDATE	SCALE	DRAWING NO.	REV.	SHEET	OF
09/10/03	--	SPC000000000062,B,1	B	1	1

THE CONTENTS OF THIS DRAWING ARE THE PROPERTY OF LEAR CORPORATION AND SUBSEQUENT DISCLOSURE REQUIRES WRITTEN APPROVAL