48592 49MHz

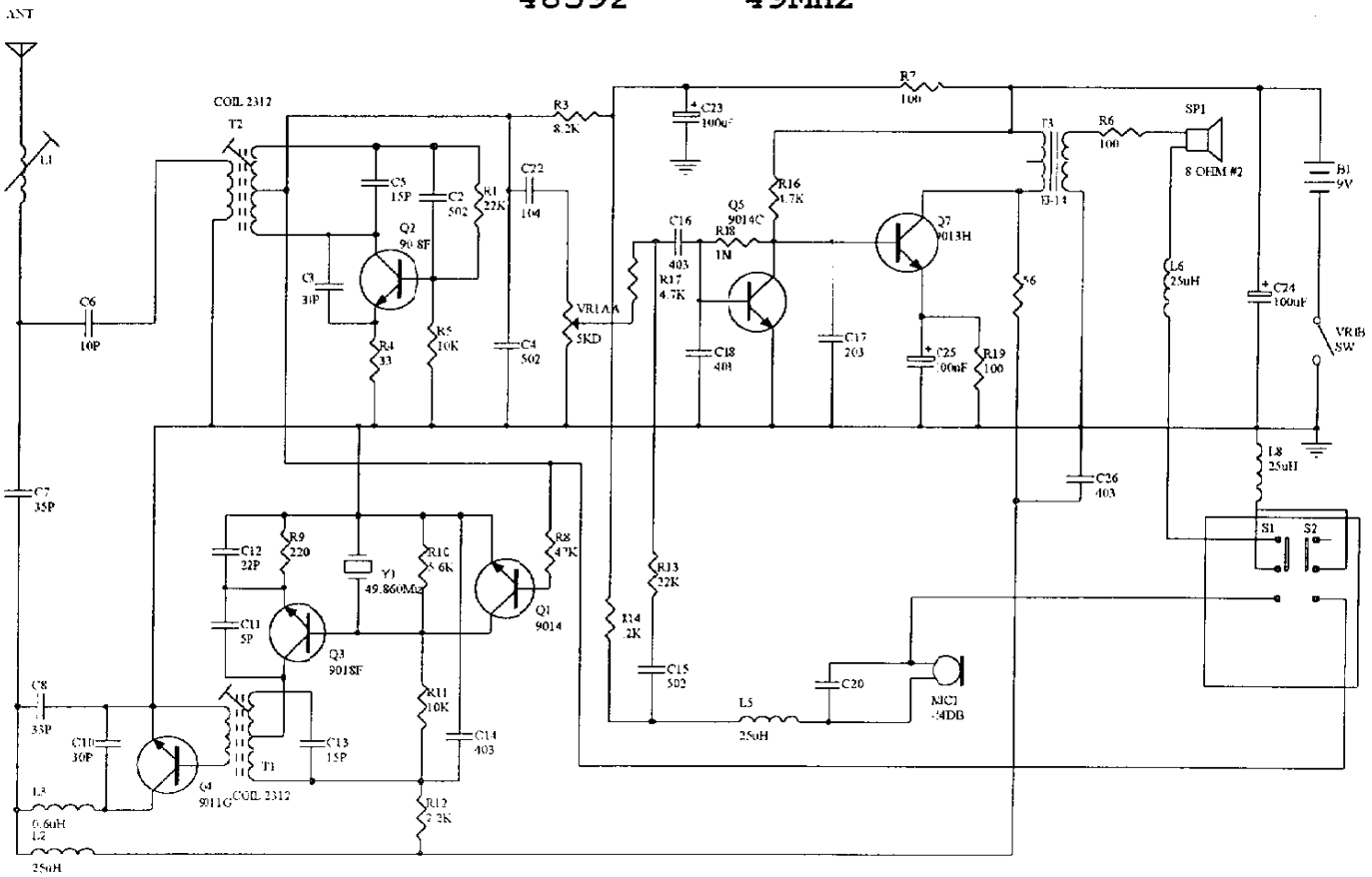

Title		
Size A4	Number	Revision
Date: 8-May-2001		Sheet of
File: A:\48592.sch		Drawn By:

RECORD VERIFIED OK