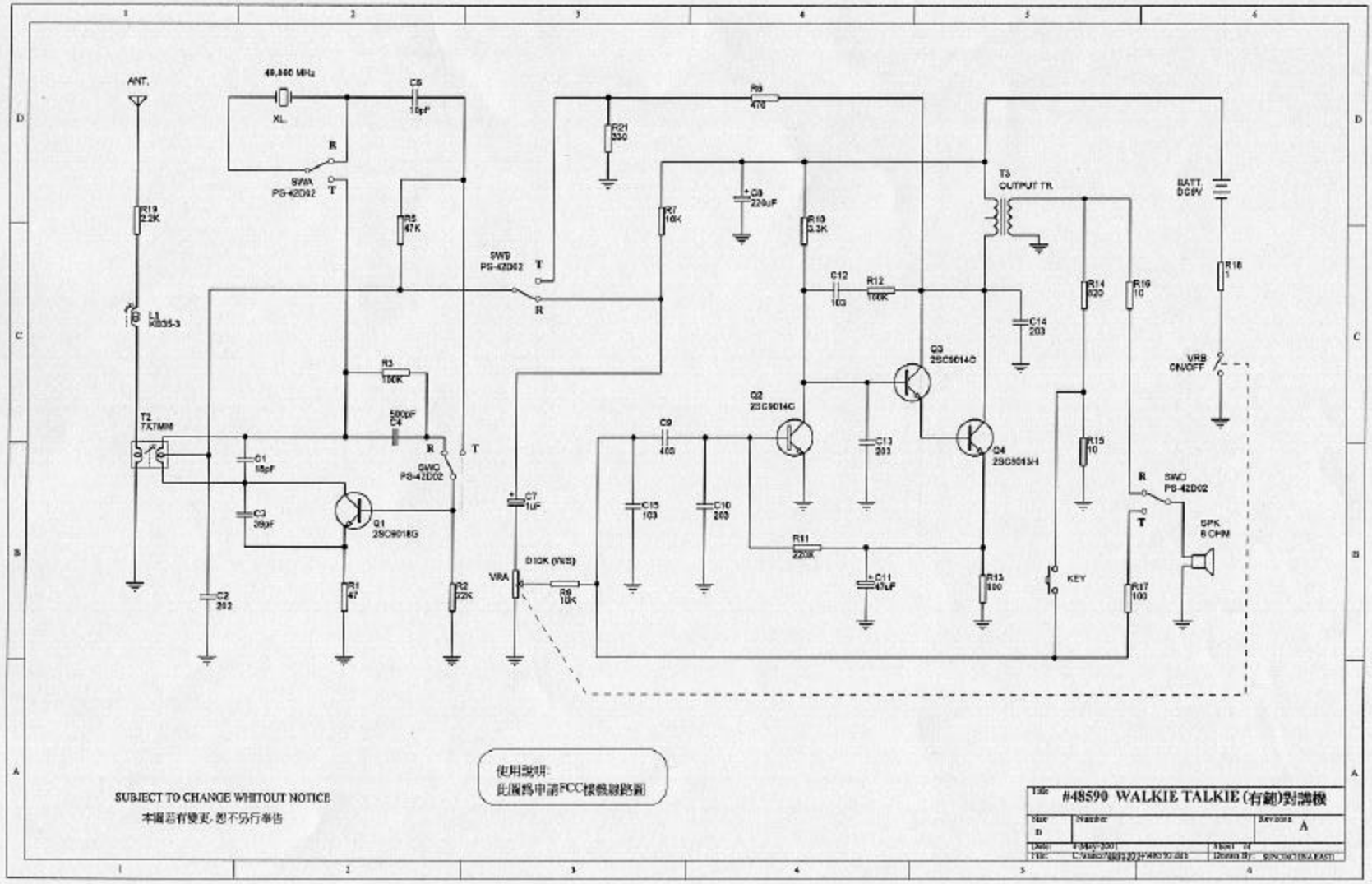

使用說明:
此圖為申請FCC樣機線路圖

SUBJECT TO CHANGE WHITOUT NOTICE
本圖若有變更,恕不另行奉告

Title	#48590 WALKIE TALKIE (有線)對講機		
Size B	Number		Revision A
Date: 4-May-2001		Sheet of	
File:		Drawn By:	