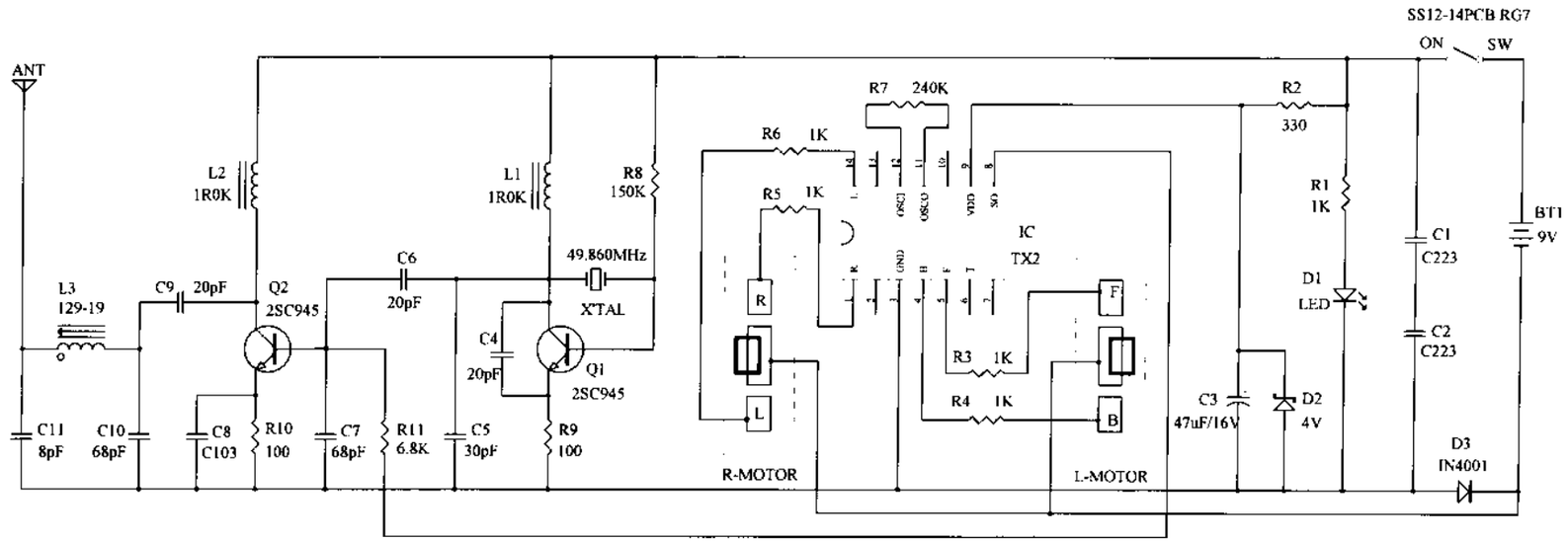

HERALD METAL & PLASTIC WORKS LTD.

DSI #27135 (49MHZ) TRANSMITTER CIRCUIT DIAGRAM

HERALD METAL & PLASTIC WORKS LTD.

興利五金塑膠廠

Title	DSI Street Savage R/C CAR (TRANSMITTER)		
Size A1	Number 27135T(49MHZ)	Revision 1	
Date 12-Mar-2001	Sheet of		
File D:\LAM\DSI-01.STREET-1\C25TS49T.SCH	Drawn By	C.W LAM (林志榮)	