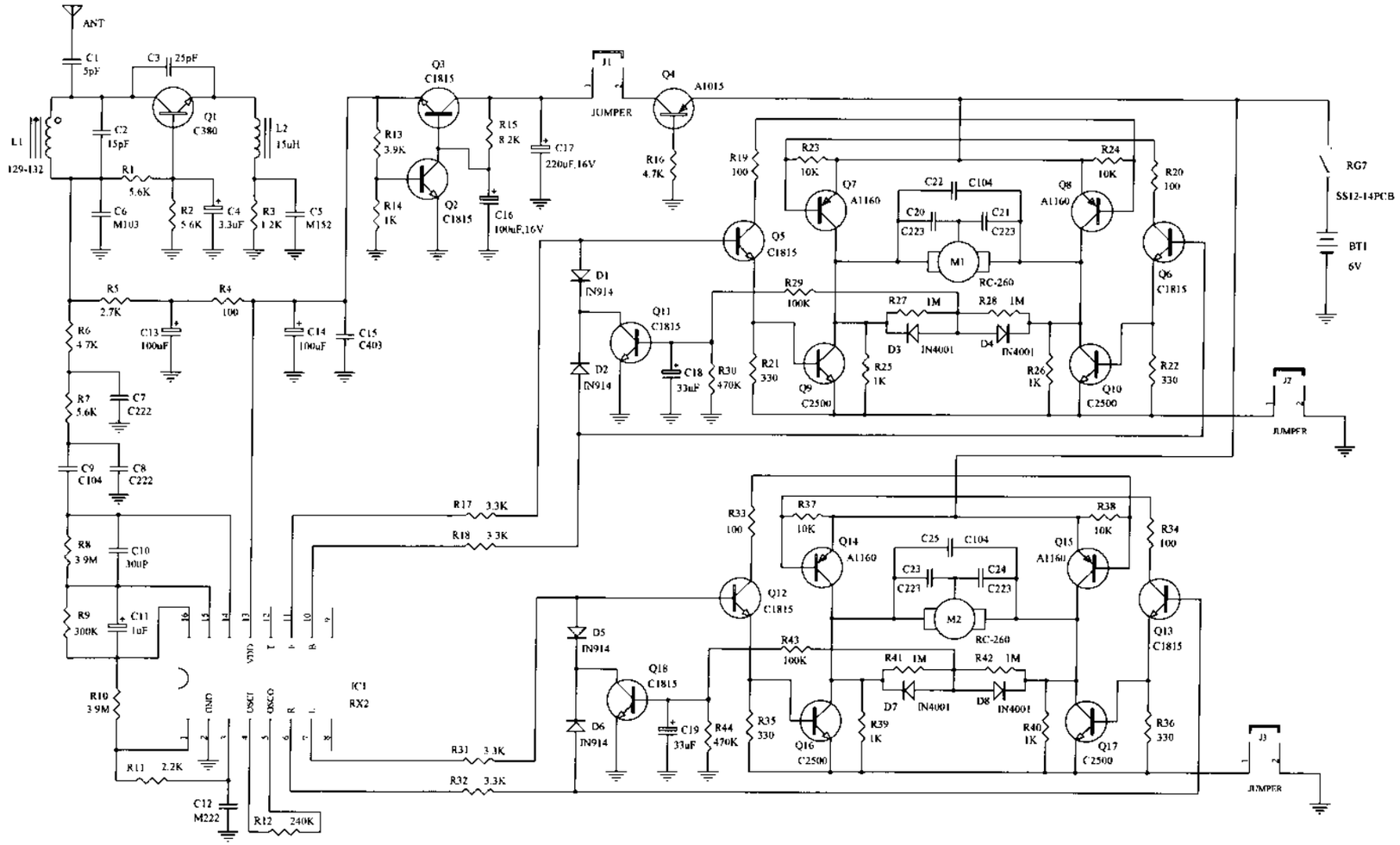

HERALD METAL & PLASTIC WORKS LTD.

DSI #27135 (49MHZ) RECEIVER CIRCUIT DIAGRAM

HERALD METAL & PLASTIC WORKS LTD.

興利五金塑膠廠

Title	DSI STREET SAVAGE R/C CAR (RECEIVER)		
Size	Number		Revision
A3	27135R (49MHZ)		1
Date:	12-Mar-2001	Sheet of	
File	D:\LAM\DSI-01\STREET 1\C2\ST549R\SDH\	By:	C W LAM(林志賢)