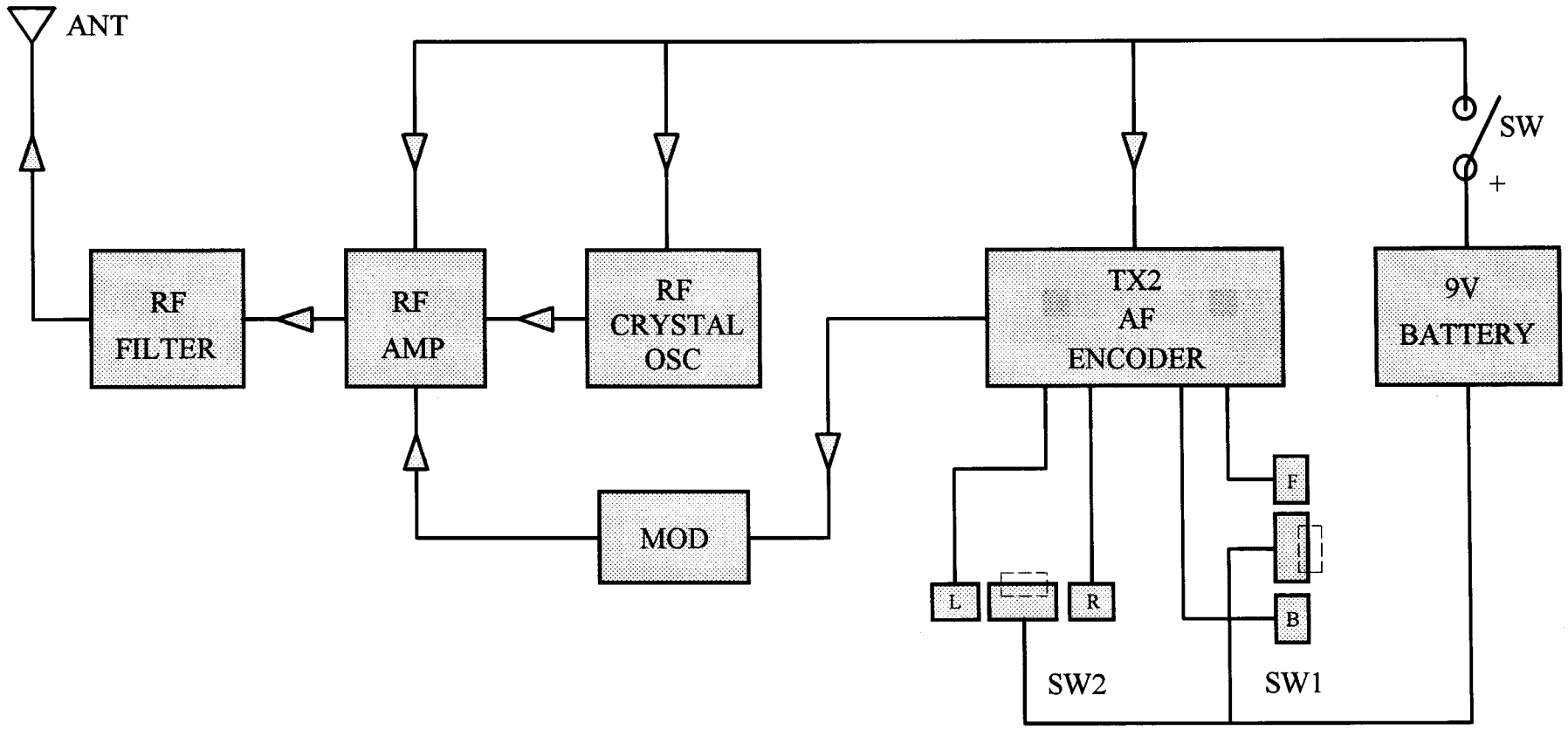

HERALD METAL & PLASTIC WORKS LTD.

DSI #27130 TRANSMITTER BLOCK DIAGRAM

HERALD METAL & PLASTIC WORKS LTD. 興利五金塑膠廠			
Title	DSI INSECTOR R/C CAR (TRANSMITTER)		
Size A3	Number 27130T		Revision 1
Date: 7-Apr-2000		Sheet of	
File: C:\LAM\..\C2INS-TR.SCH		Drawn By: C.W.LAM (林志雄)	