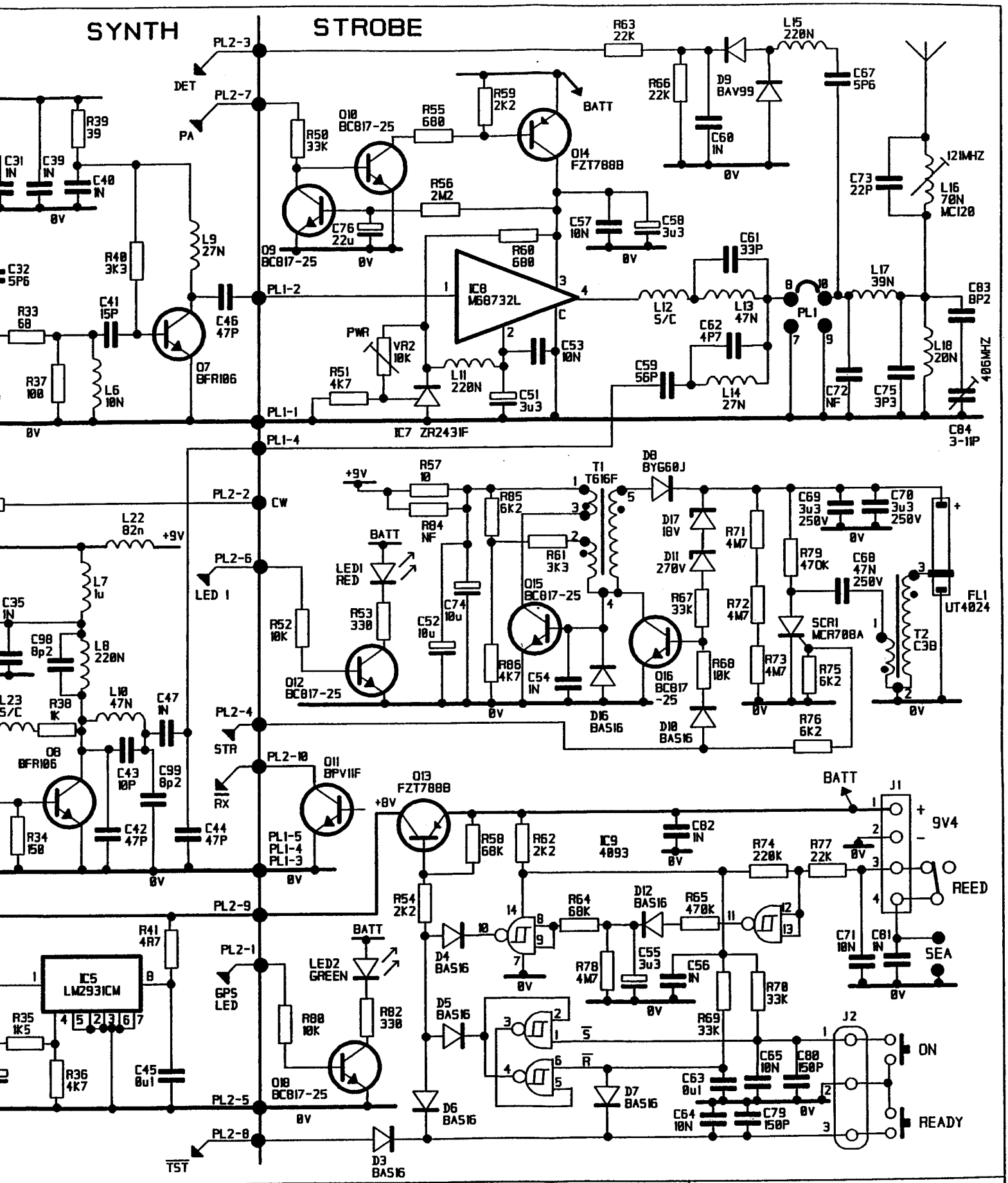

64 EPIRB	DRAWING No. 82-560C	SHEET 1 OF 2