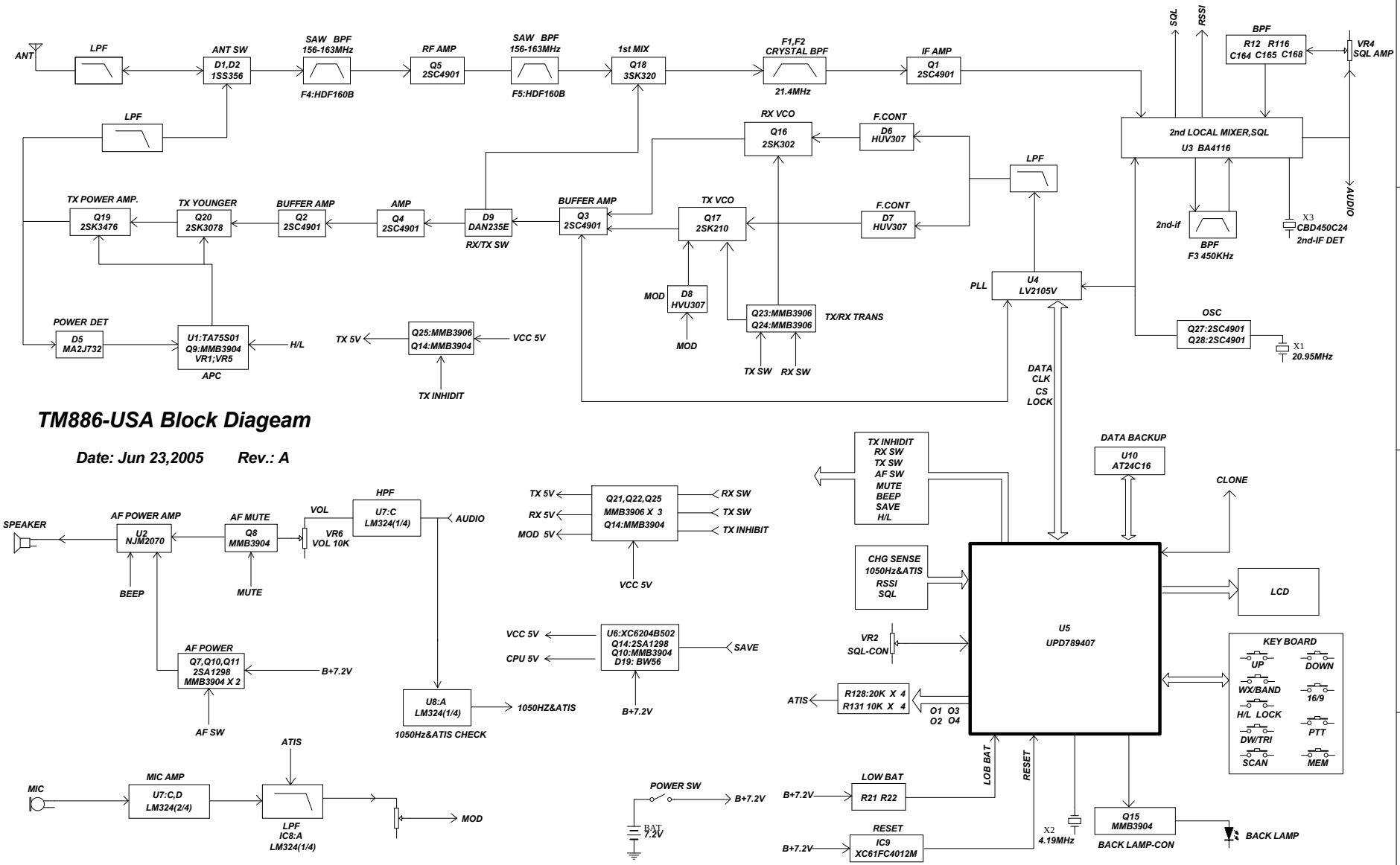


# TM886-USA Block Diageam

**Date: Jun 23,2005 Rev.: A**