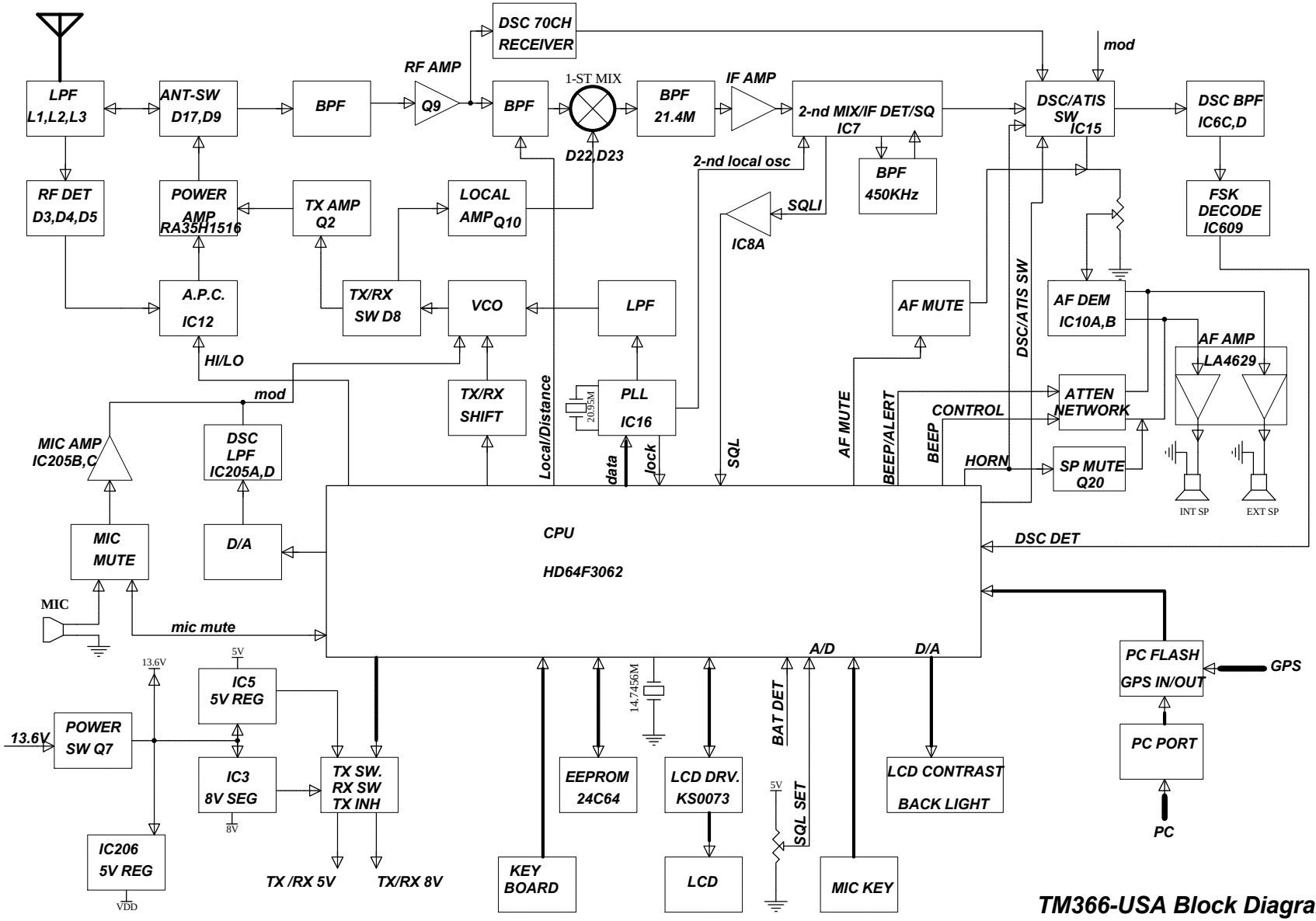

TM366-USA Block Diagram

Date: Sep 13,2005 Rev.: A