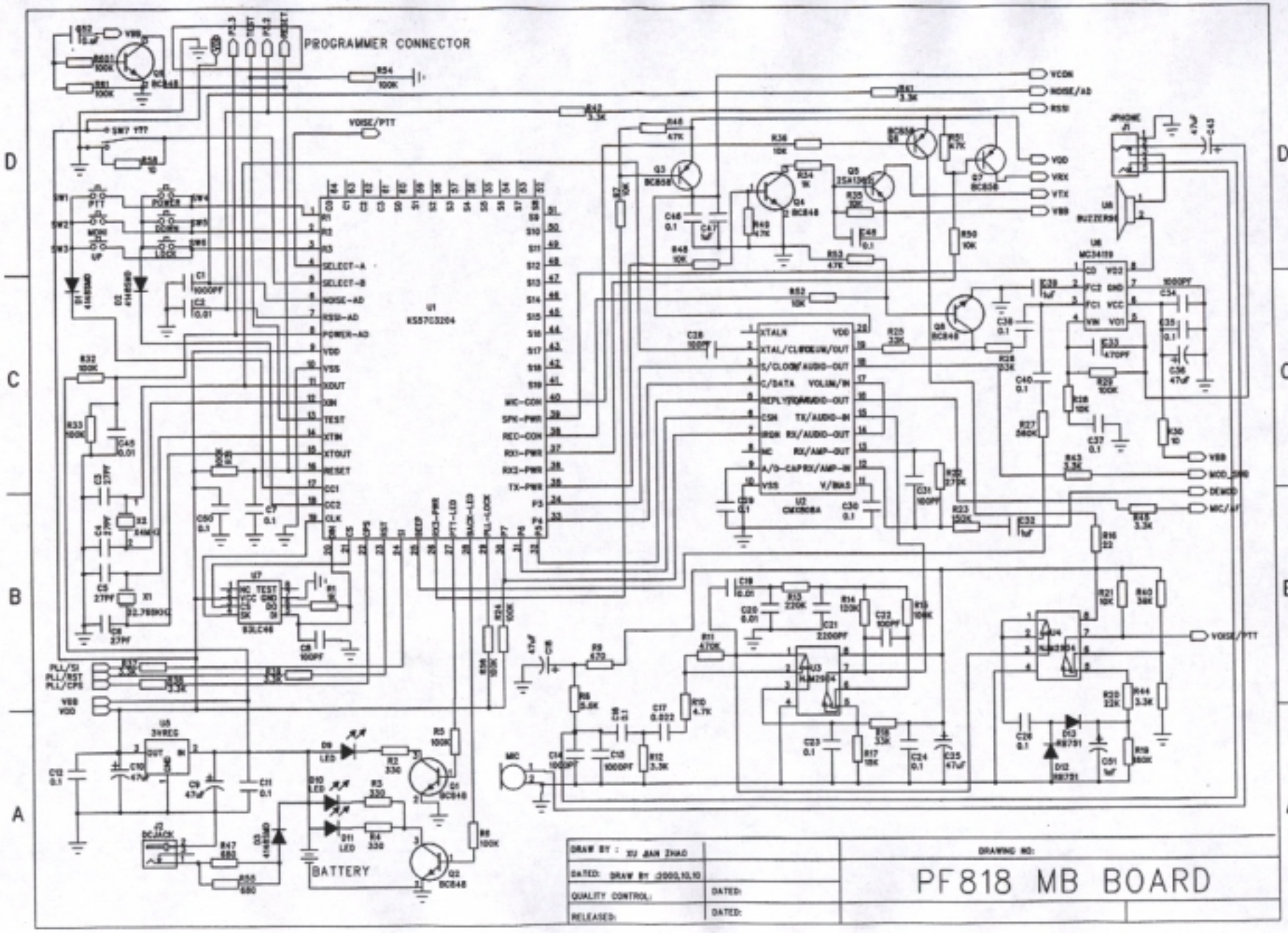
PROGRAMMER CONNECTOR
VOISE/PTT
VCON
NOISE/AD
RSSI
VDD
VRX
VTX
VBB
U1
KS57C3204
U2
CM8088A
U3
U4
U5
3VREG
U6
MC34119
U7
93LC46
BATTERY
MIC
JPHONE
DCJACK
BUZZER
SELECT-A
SELECT-B
NOISE-AD
RSSI-AD
POWER-AD
WIC-CON
SPK-PWR
REC-CON
RX1-PWR
RX2-PWR
TX-PWR
PLL/SI
PLL/RST
PLL/CPS
MOD_SIG
DEMOD
MIC/AF
PTT
POWER
MONI
DOWN
UP
LOCK
DRAW BY : XU JIAN ZHAO
DATED: DRAW BY :2000.10.10
QUALITY CONTROL:
RELEASED:
DRAWING NO:
PF818 MB BOARD

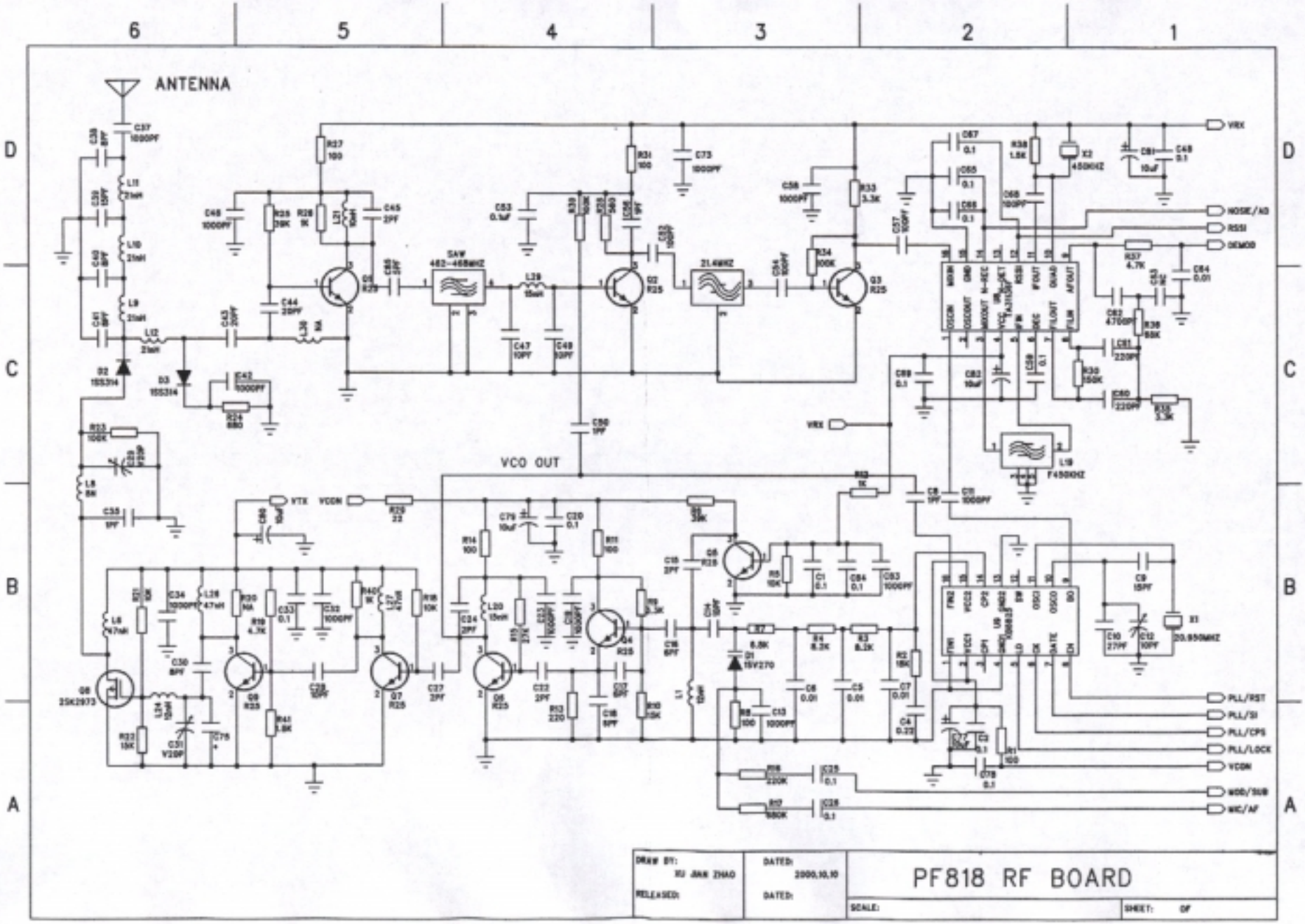
ANTENNA
VCO OUT
VRX
VTX
VCON
NOISE/KO
RSSI
DEMOD
PLL/RST
PLL/SI
PLL/CPS
PLL/LOCK
MOD/SUB
MIC/AF
SAW
462-468MHZ
21.4MHZ
F450KHZ
20.950MHZ
DRAW BY:
XU JIAN ZHAO
RELEASED:
DATED:
2000.10.10
DATED:
PF818 RF BOARD
SCALE:
SHEET: OF

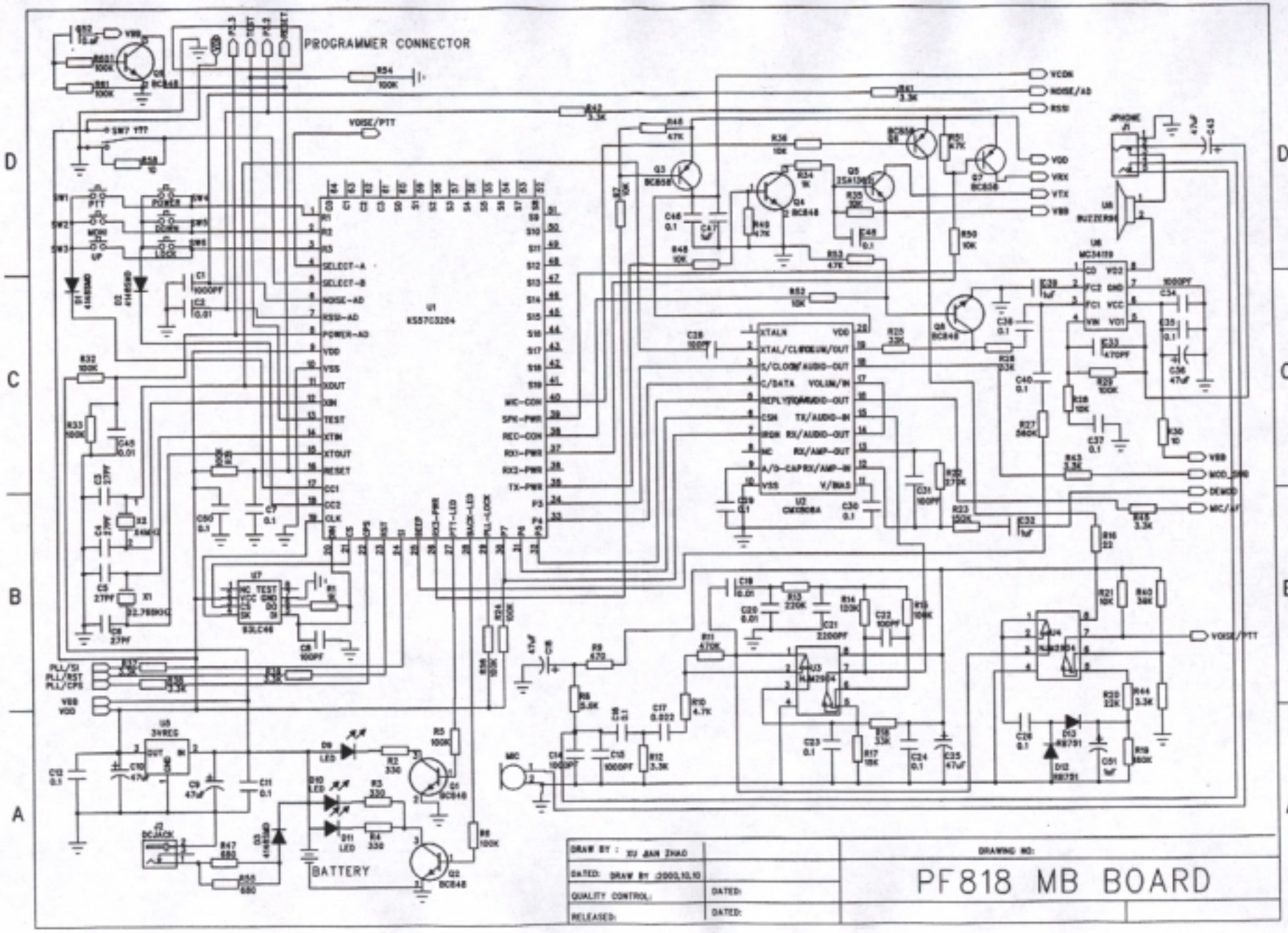
PROGRAMMER CONNECTOR
VOISE/PTT
VCON
NOISE/AD
RSSI
VDD
VRX
VTX
VBB
U1
KS57C3204
U2
CM8088A
U3
U4
U5
3VREG
U6
MC34119
U7
93LC46
BATTERY
MIC
JPHONE
DCJACK
BUZZER
SELECT-A
SELECT-B
NOISE-AD
RSSI-AD
POWER-AD
WIC-CON
SPK-PWR
REC-CON
RX1-PWR
RX2-PWR
TX-PWR
PLL/SI
PLL/RST
PLL/CPS
MOD_SIG
DEMOD
MIC/AF
PTT
POWER
MONI
DOWN
UP
LOCK
DRAW BY : XU JIAN ZHAO
DATED: DRAW BY :2000.10.10
QUALITY CONTROL:
RELEASED:
DRAWING NO:
PF818 MB BOARD

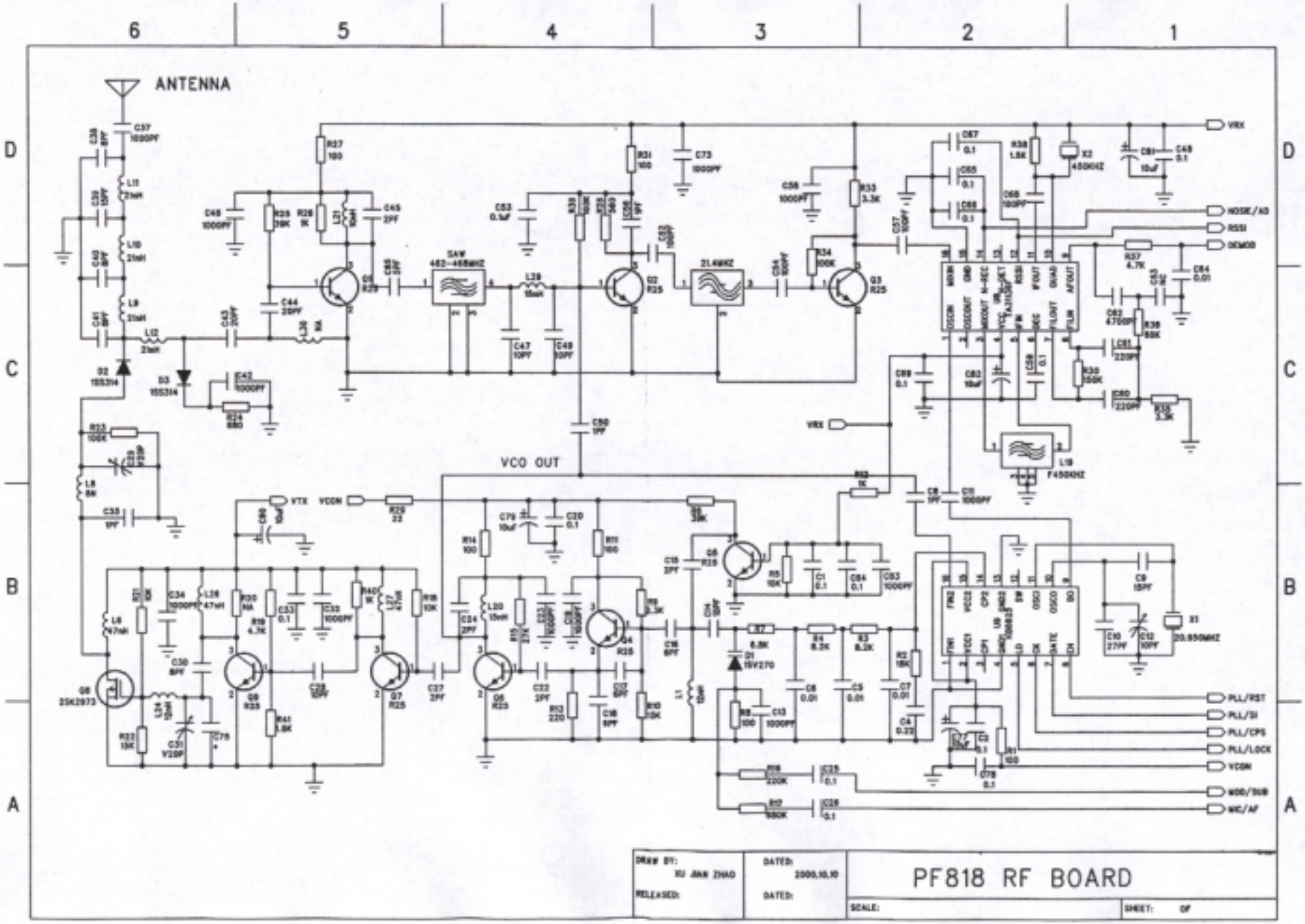
ANTENNA
VCO OUT
VRX
VTX
VCON
NOISE/KO
RSSI
DEMOD
PLL/RST
PLL/SI
PLL/CPS
PLL/LOCK
MOD/SUB
MIC/AF
SAW
462-468MHZ
21.4MHZ
F450KHZ
20.950MHZ
DRAW BY:
XU JIAN ZHAO
RELEASED:
DATED:
2000.10.10
DATED:
PF818 RF BOARD
SCALE:
SHEET: OF