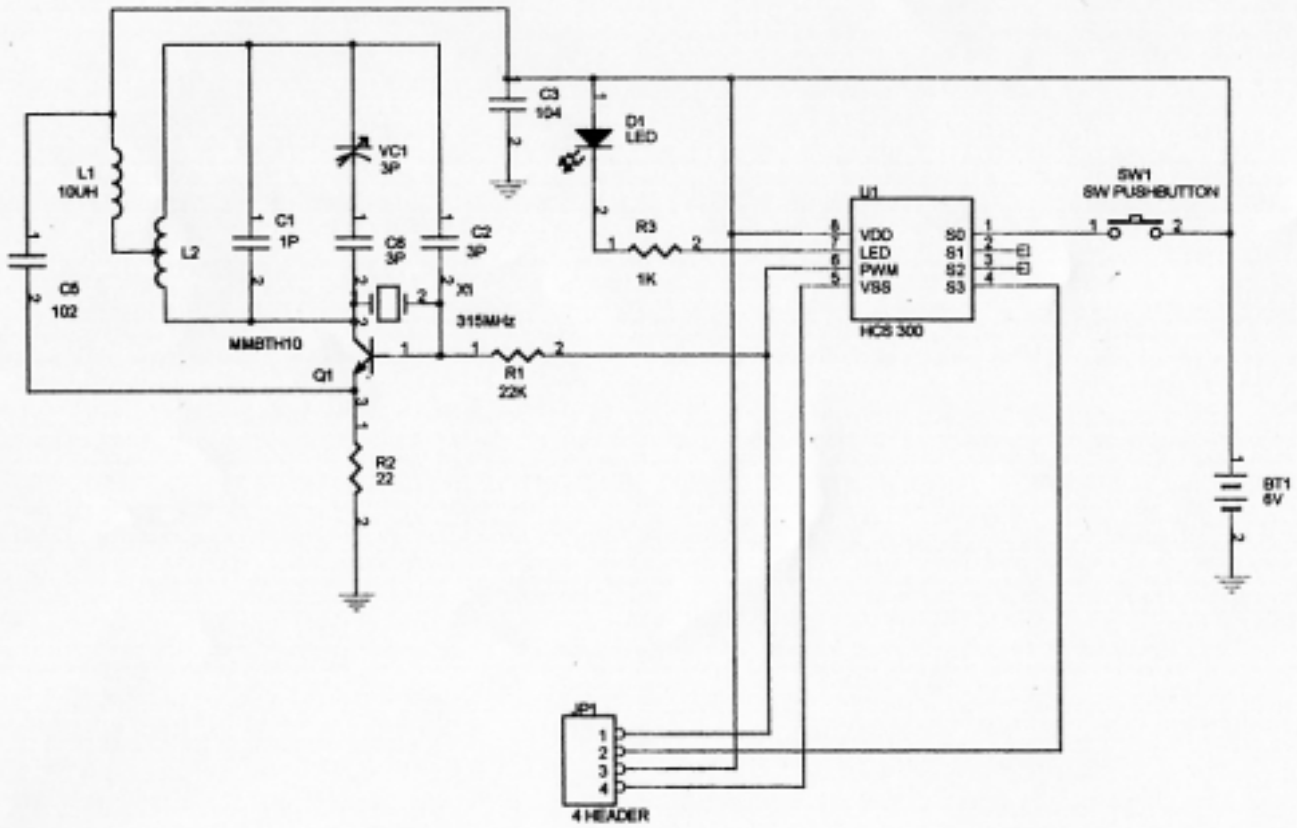

Title	TX22-2(315MHz+SAW)	
Size A	Document Number 4138VS01	Rev
Date: Monday, April 09, 2001	Sheet 1 of 1	