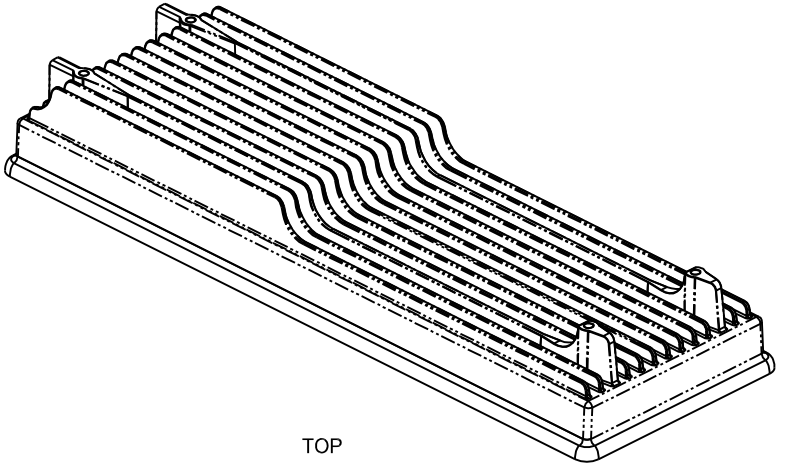

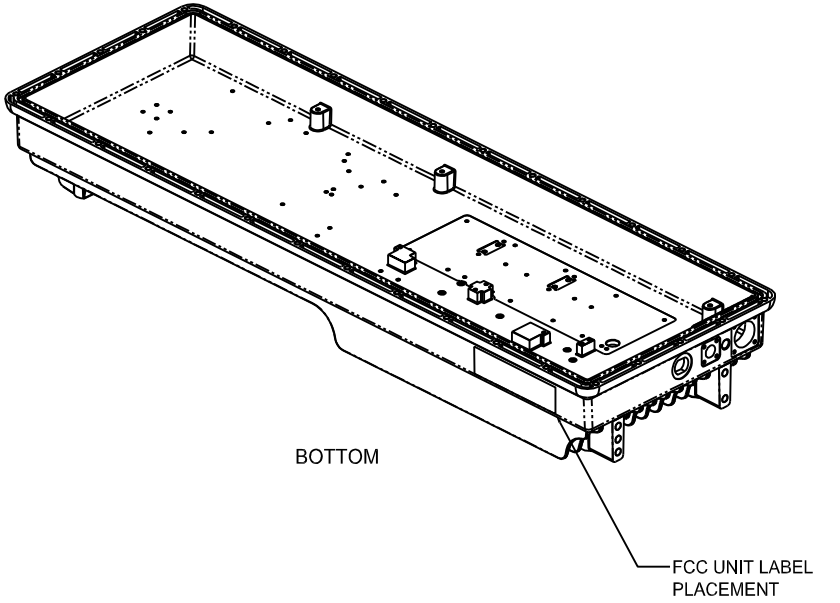

ORIENTATION VIEWS

CONTRACT NO.		SOLECTEK 6370 Nancy Ridge Drive, Suite 109 San Diego, California 92121-3212 Tel (858) 450-1220 Fax: (858) 457-2681 http://www.solectek.com
DRAWN D.Perry	DATE 5/15/08	TITLE FCC UNIT LABEL, PLACEMENT, BASE STATION
MECH CHECK		
ELEC CHECK		
APPD		SIZE D · FSCM NO. · DWG. NO. 1504901 · REV. A
		SCALE NONE · FILE NO. 1504901_A.DWG · Sheet 1 OF 1