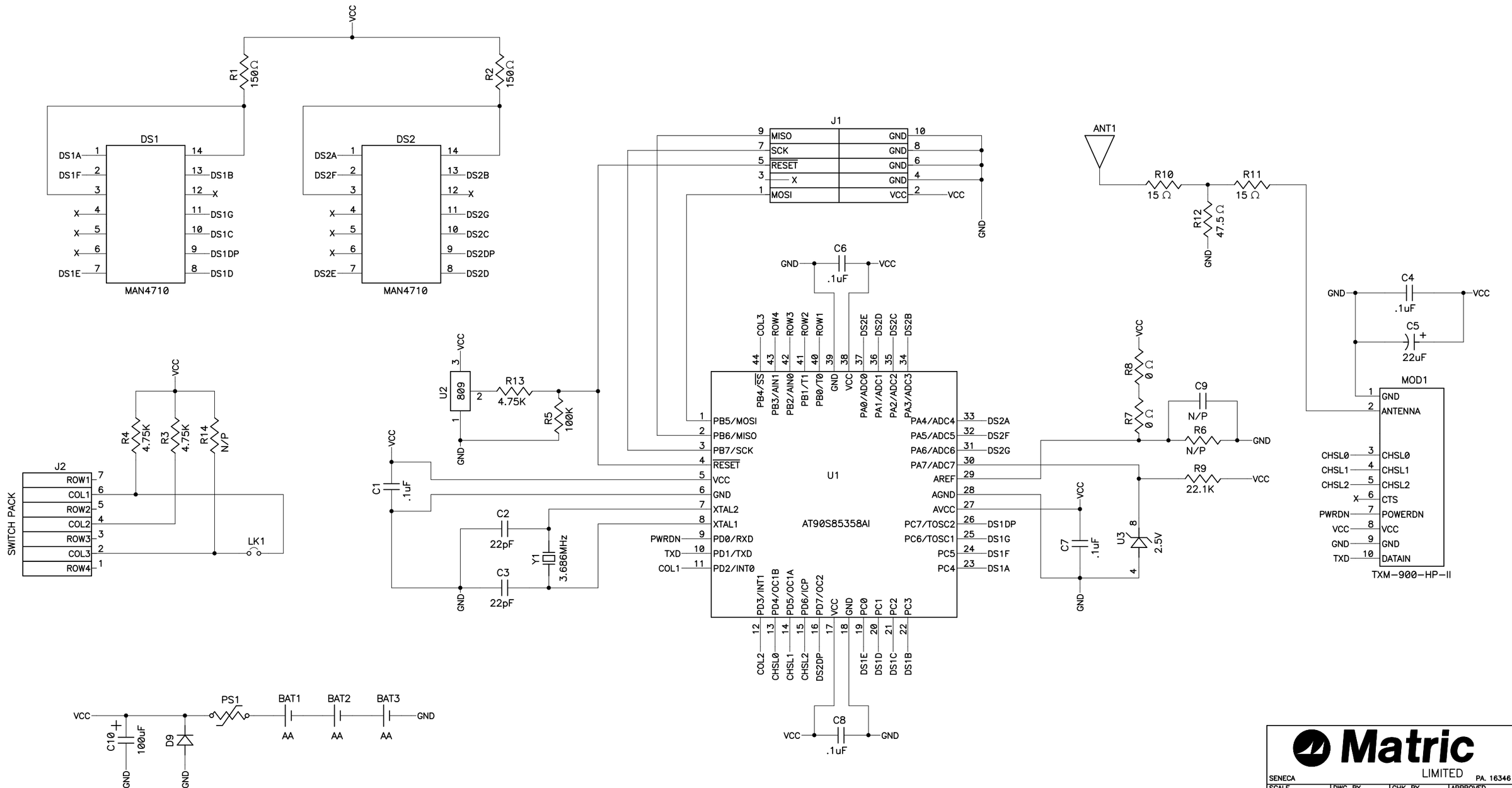

Matric LIMITED
SENECA PA. 16346

SCALE	DWG. BY	CHK. BY	APPROVED
NTS	DEH	DOC.	DEH

TRIGGERPAD 500 CIRCUIT ASSEMBLY

DATE	DWG. NO	REV.
6-2-00	ES 205-1828	4

SHEET 1 OF 1

REVISIONS	9-6-00	12-13-00	2-6-01	3-16-01
	EO#8652	EO#9063	EO#9341	EO#9647