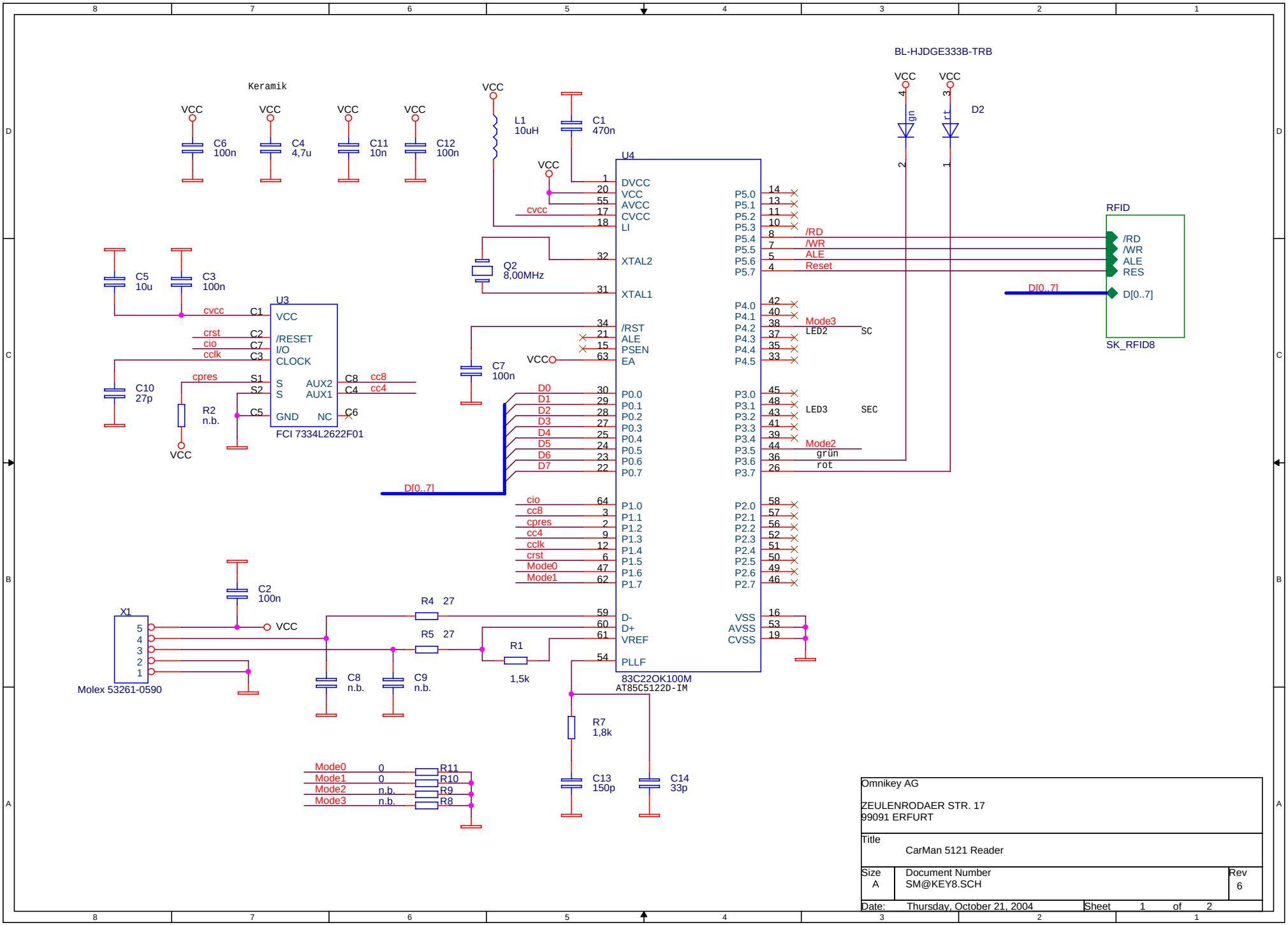
Keramik
VCC
C6 100n
C4 4,7u
C11 10n
C12 100n
L1 10uH
C1 470n
BL-HJDGE333B-TRB
D2
gn
rt
U4
DVCC
VCC
AVCC
CVCC
LI
XTAL2
XTAL1
/RST
ALE
PSEN
EA
P0.0
P0.1
P0.2
P0.3
P0.4
P0.5
P0.6
P0.7
P1.0
P1.1
P1.2
P1.3
P1.4
P1.5
P1.6
P1.7
D-
D+
VREF
PLLF
P5.0
P5.1
P5.2
P5.3
P5.4
P5.5
P5.6
P5.7
P4.0
P4.1
P4.2
P4.3
P4.4
P4.5
P3.0
P3.1
P3.2
P3.3
P3.4
P3.5
P3.6
P3.7
P2.0
P2.1
P2.2
P2.3
P2.4
P2.5
P2.6
P2.7
VSS
AVSS
CVSS
83C22OK100M
AT85C5122D-IM
Q2 8,00MHz
C7 100n
/RD
/WR
ALE
Reset
Mode3
LED2
SC
LED3
SEC
Mode2
grün
rot
D[0..7]
RFID
/RD
/WR
ALE
RES
D[0..7]
SK_RFID8
C5 10u
C3 100n
U3
VCC
/RESET
I/O
CLOCK
S
S
GND
AUX2
AUX1
NC
FCI 7334L2622F01
cvcc
crst
cio
cclk
cpres
cc8
cc4
C10 27p
R2 n.b.
C2 100n
X1
Molex 53261-0590
R4 27
R5 27
R1 1,5k
C8 n.b.
C9 n.b.
R7 1,8k
C13 150p
C14 33p
Mode0 0 R11
Mode1 0 R10
Mode2 n.b. R9
Mode3 n.b. R8
Omnikey AG
ZEULENRODAER STR. 17
99091 ERFURT
Title
CarMan 5121 Reader
Size A
Document Number SM@KEY8.SCH
Rev 6
Date: Thursday, October 21, 2004
Sheet 1 of 2

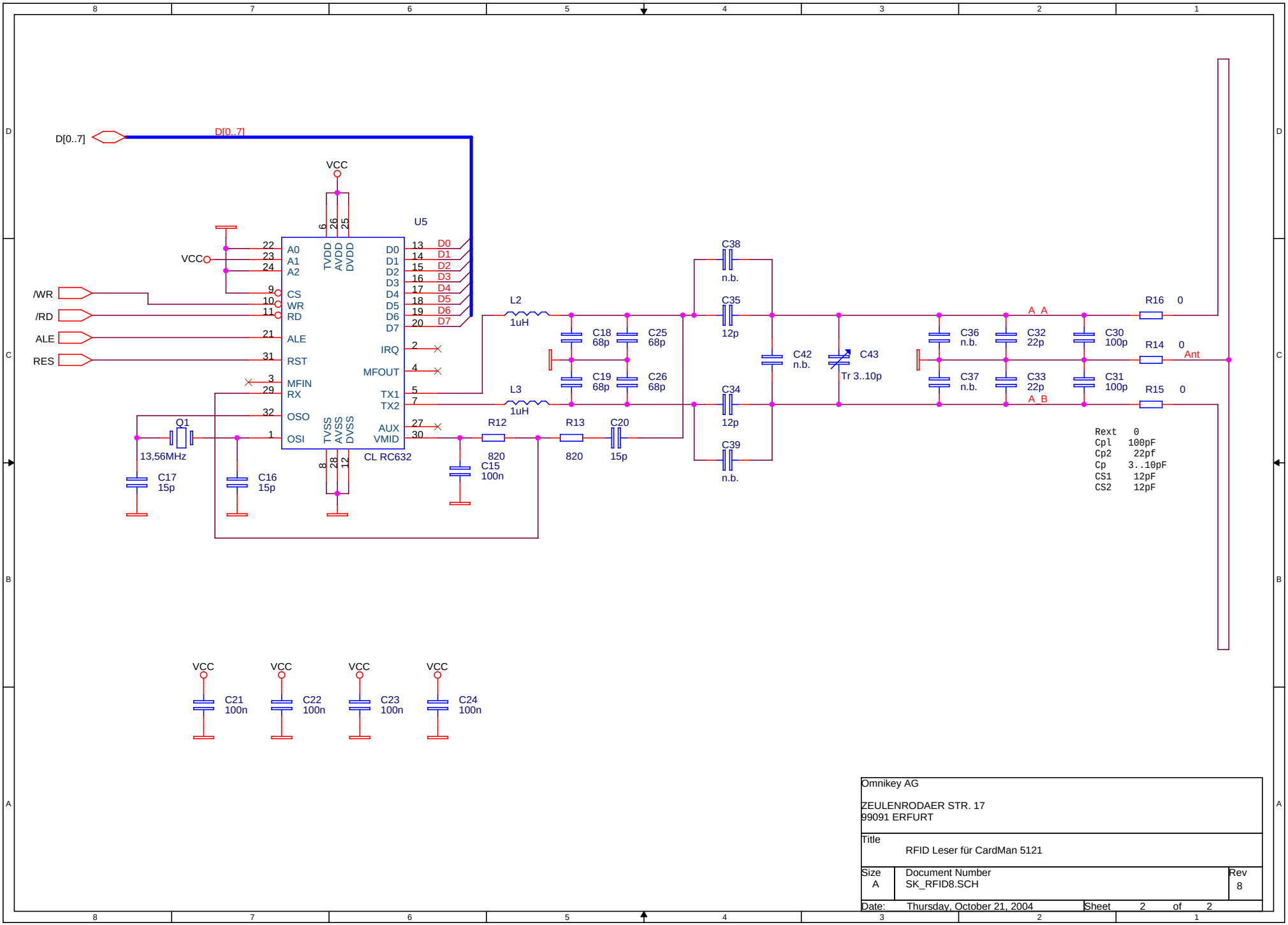

Omnikey AG

ZEULENRODAER STR. 17
99091 ERFURT

Title
RFID Leser für CardMan 5121

Size	Document Number	Rev
A	SK_RFID8.SCH	8

Date: Thursday, October 21, 2004 Sheet 2 of 2