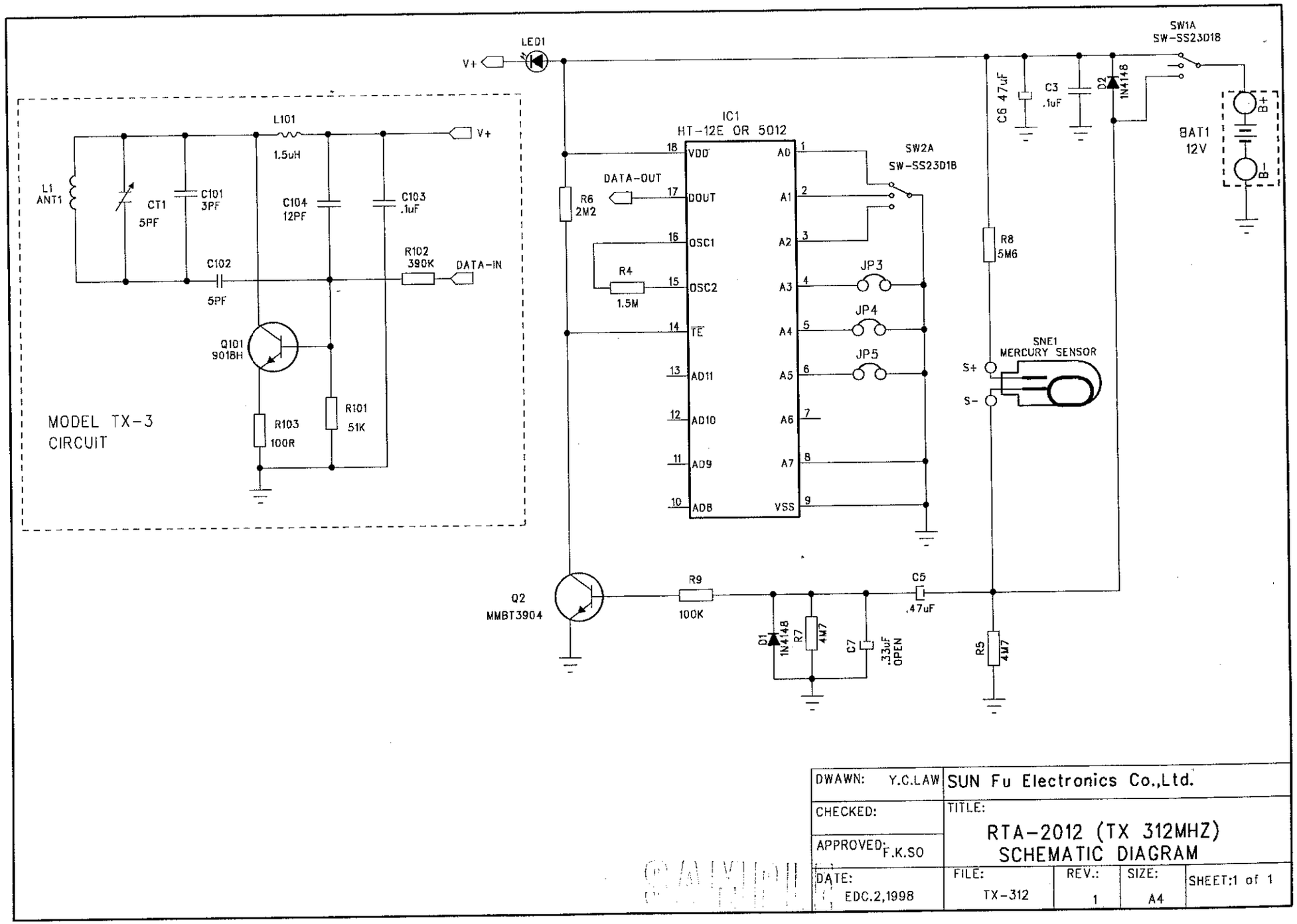

DWAWN: Y.C.LAW	SUN Fu Electronics Co.,Ltd.			
CHECKED:	TITLE: RTA-2012 (TX 312MHZ) SCHEMATIC DIAGRAM			
APPROVED: F.K.SO				
DATE: EDC.2,1998	FILE: TX-312	REV.: 1	SIZE: A4	SHEET:1 of 1