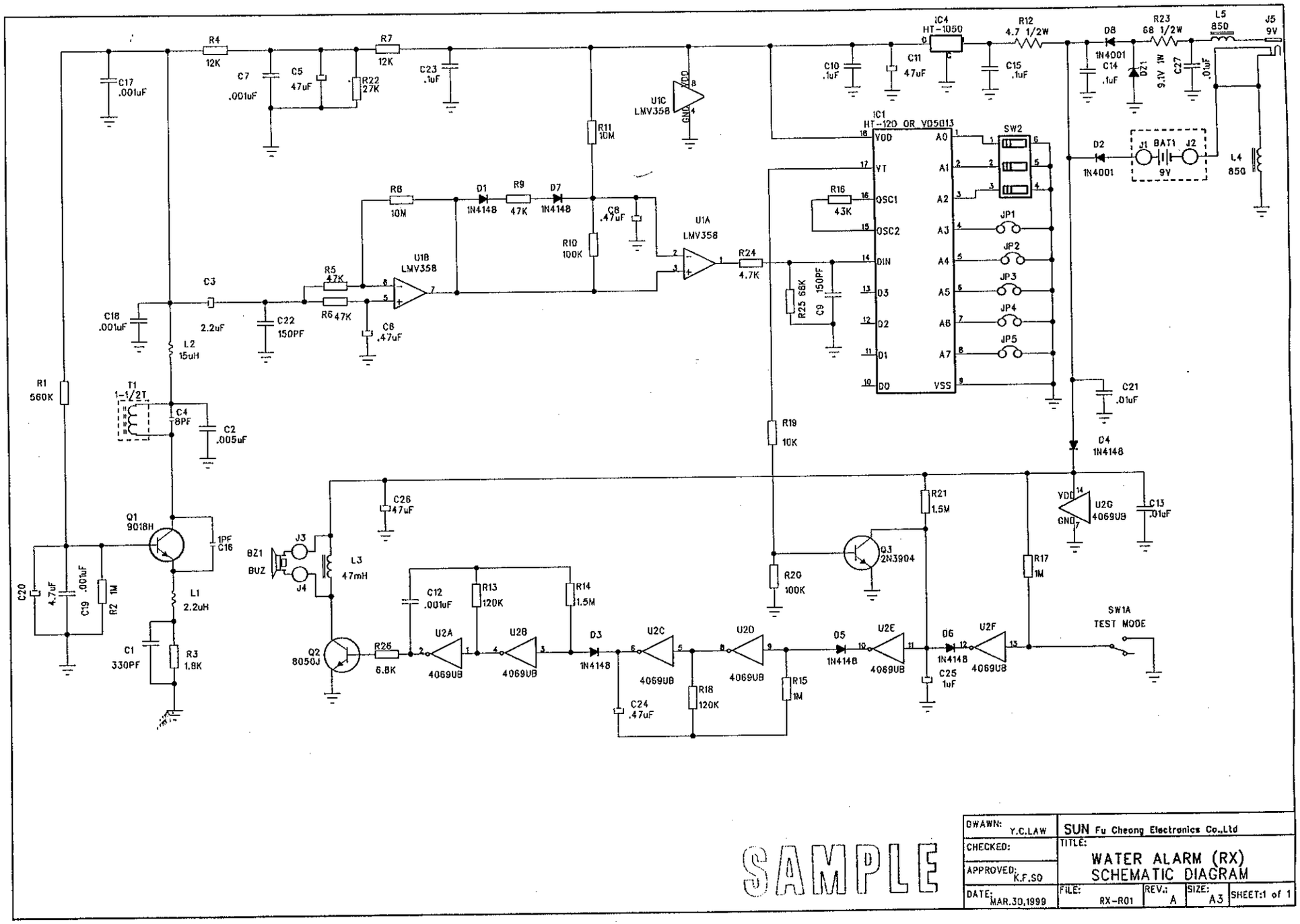

SAMPLE

DWAWN: Y.C.LAW	SUN Fu Cheong Electronics Co.,Ltd			
CHECKED:	TITLE: WATER ALARM (RX) SCHEMATIC DIAGRAM			
APPROVED: K.F.SO				
DATE: MAR.30.1999	FILE: RX-R01	REV.: A	SIZE: A3	SHEET:1 of 1