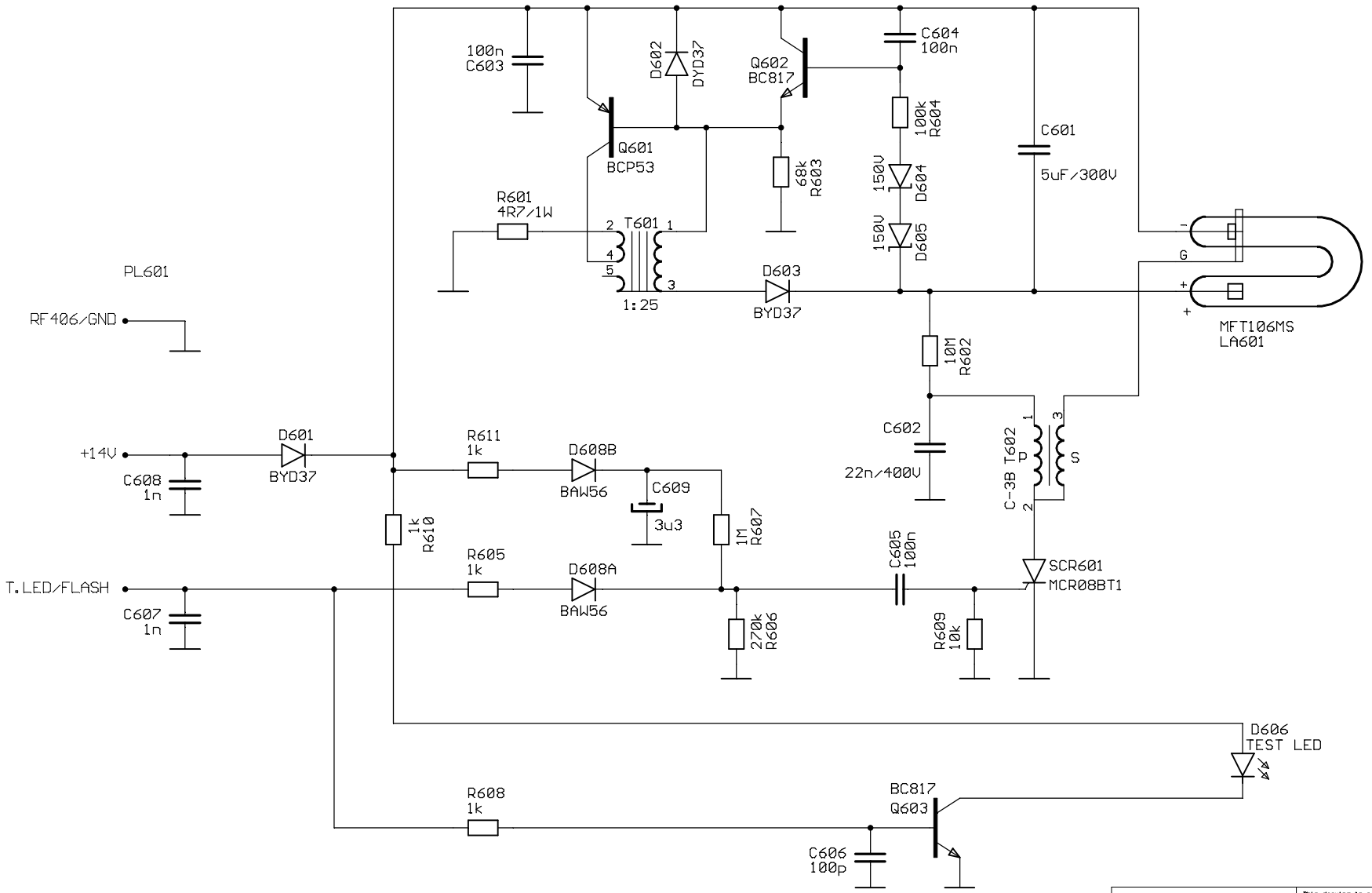

Material:		This drawing is a property of Jotron and must not be duplicated or used for manufacture of the parts disclosed herein without permission from Jotron
Tolerances: (when otherwise not shown)		Scale:
Appr.:	Dft.: BA	Dates 020597

JOTRON
electronics a.s

Tron40S

Antenna Board

Replaces dwg.: 051295

Repl. by dwg.:

E-92718