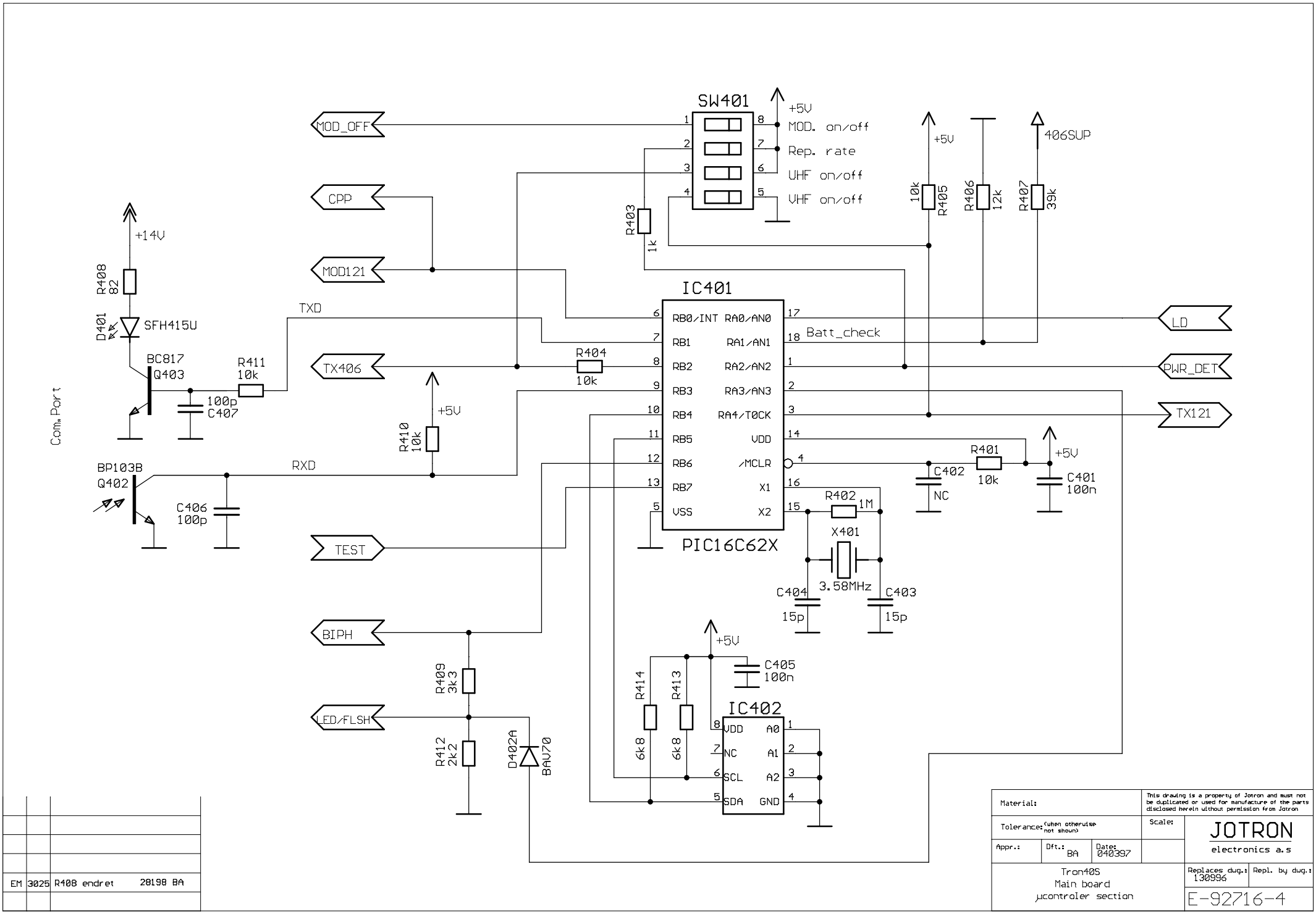
SW401
+5V
MOD. on/off
Rep. rate
UHF on/off
VHF on/off
MOD_OFF
CPP
MOD121
TX406
TEST
BIPH
LED/FLSH
LD
PWR_DET
TX121
406SUP
R403 1k
R405 10k
R406 12k
R407 39k
IC401
RB0/INT RA0/AN0
RB1 RA1/AN1
RB2 RA2/AN2
RB3 RA3/AN3
RB4 RA4/T0CK
RB5 VDD
RB6 /MCLR
RB7 X1
VSS X2
Batt_check
PIC16C62X
R404 10k
R410 10k
R401 10k
C402 NC
C401 100n
R402 1M
X401 3.58MHz
C404 15p
C403 15p
+14V
R408 82
D401 SFH415U
BC817 Q403
R411 10k
100p C407
TXD
RXD
Com. Port
BP103B Q402
C406 100p
R409 3k3
R412 2k2
D402A BAV70
R414 6k8
R413 6k8
C405 100n
IC402
VDD A0
NC A1
SCL A2
SDA GND
EM 3025 R408 endret 28198 BA
Material:
This drawing is a property of Jotron and must not be duplicated or used for manufacture of the parts disclosed herein without permission from Jotron
Tolerance: (when otherwise not shown)
Scale:
Appr.:
Dft.: BA
Date: 040397
JOTRON
electronics a.s
Tron40S
Main board
µcontroler section
Replaces dwg.: 130996
Repl. by dwg.:
E-92716-4