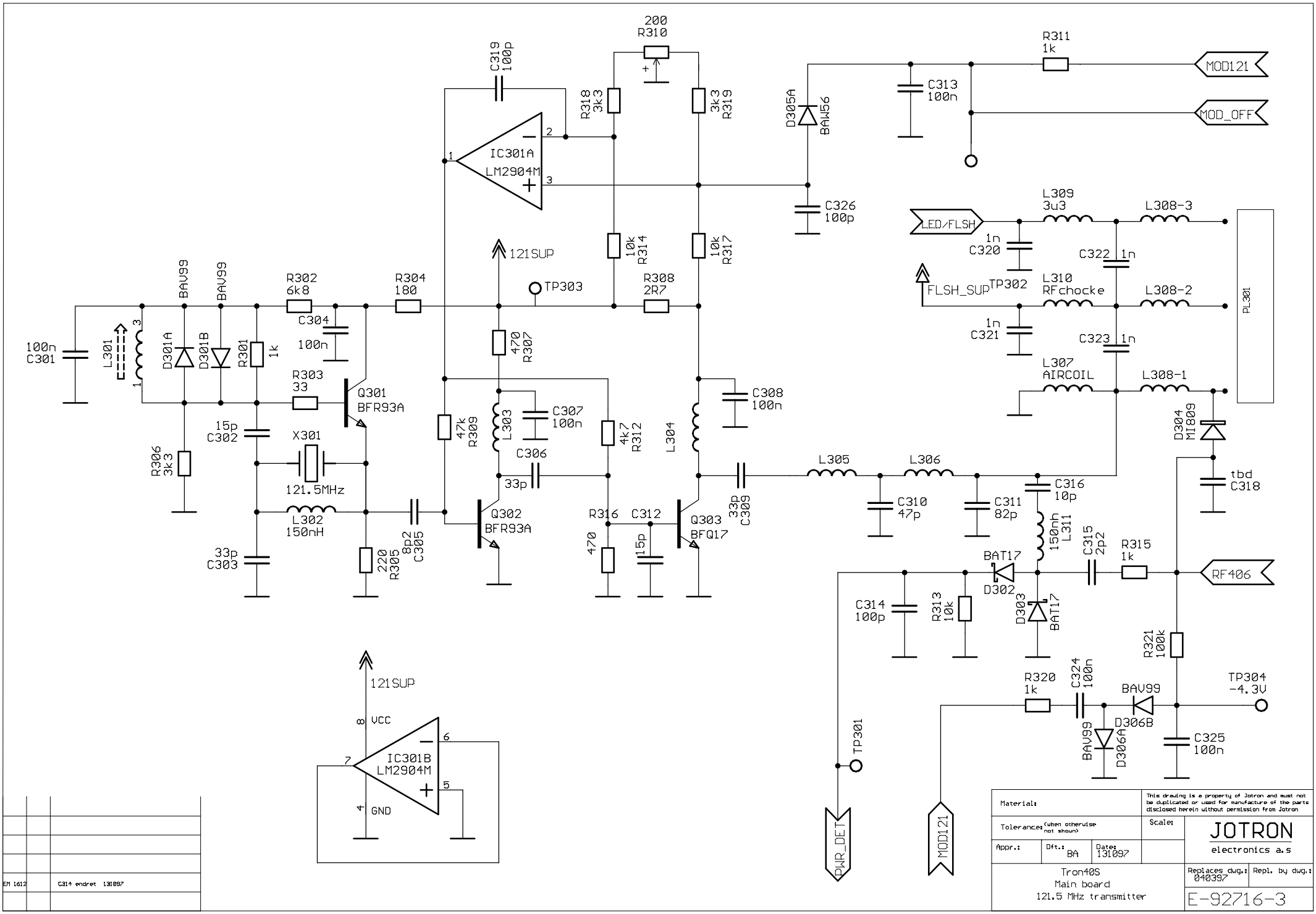

EM 1612	C314 endret 131097	

Material:			This drawing is a property of Jotron and must not be duplicated or used for manufacture of the parts disclosed herein without permission from Jotron
Tolerances: (when otherwise not shown)			Scale:
Appr.:	Dft.: BA	Date: 131097	
Tron40S Main board 121.5 MHz transmitter			JOTRON electronics a.s
Replaces dwg.: 040397	Repl. by dwg.:		
E-92716-3			