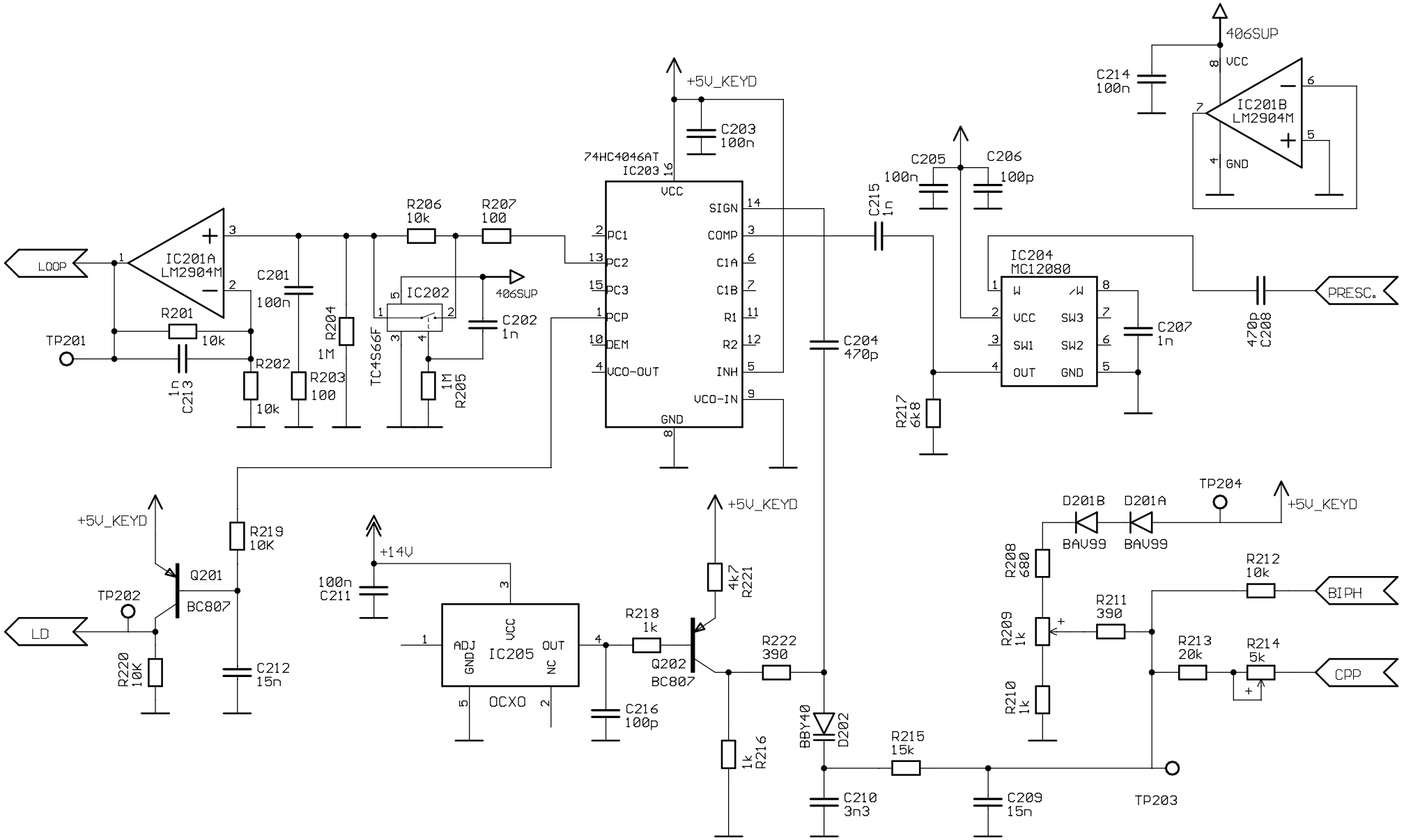

Material:			This drawing is a property of Jotron and must not be duplicated or used for manufacture of the parts disclosed herein without permission from Jotron
Tolerances: (when otherwise not shown)		Scale:	JOTRON electronics a.s
Appr.:	Dft.: BA	Date: 040397	
Tron40S Main board 406 PLL section			Replaces dwg.: 260396 / Repl. by dwg.:
			E-92716-2