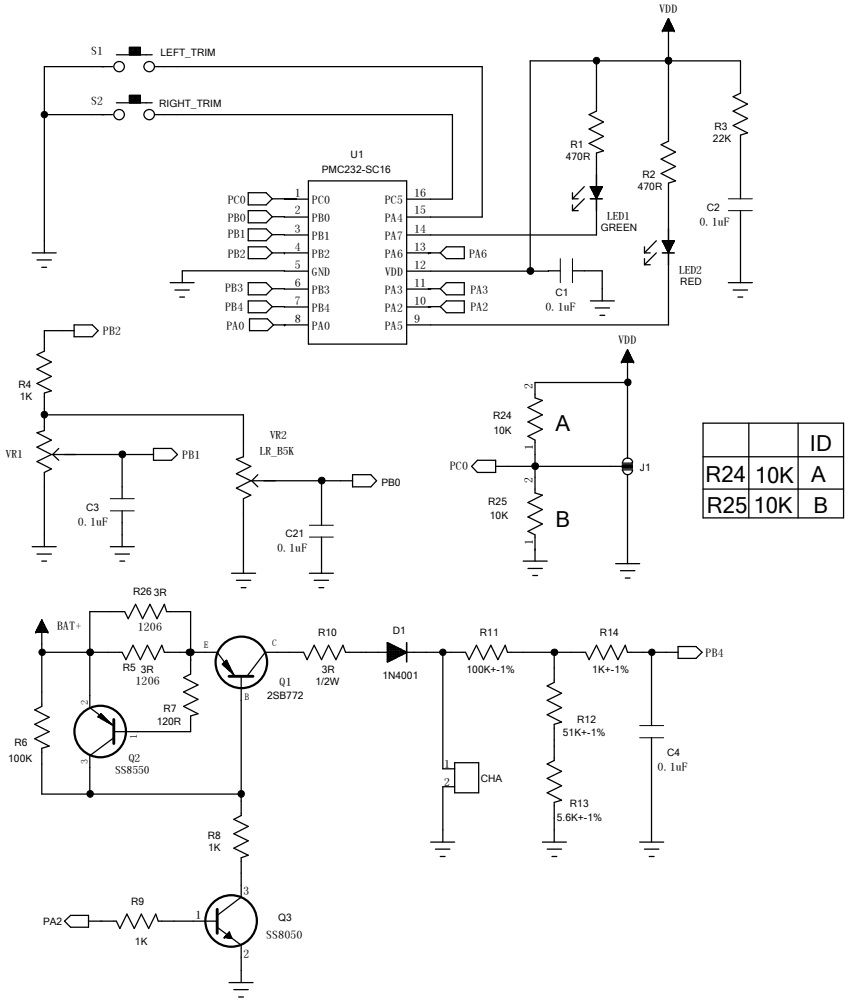

		ID
R24	10K	A
R25	10K	B

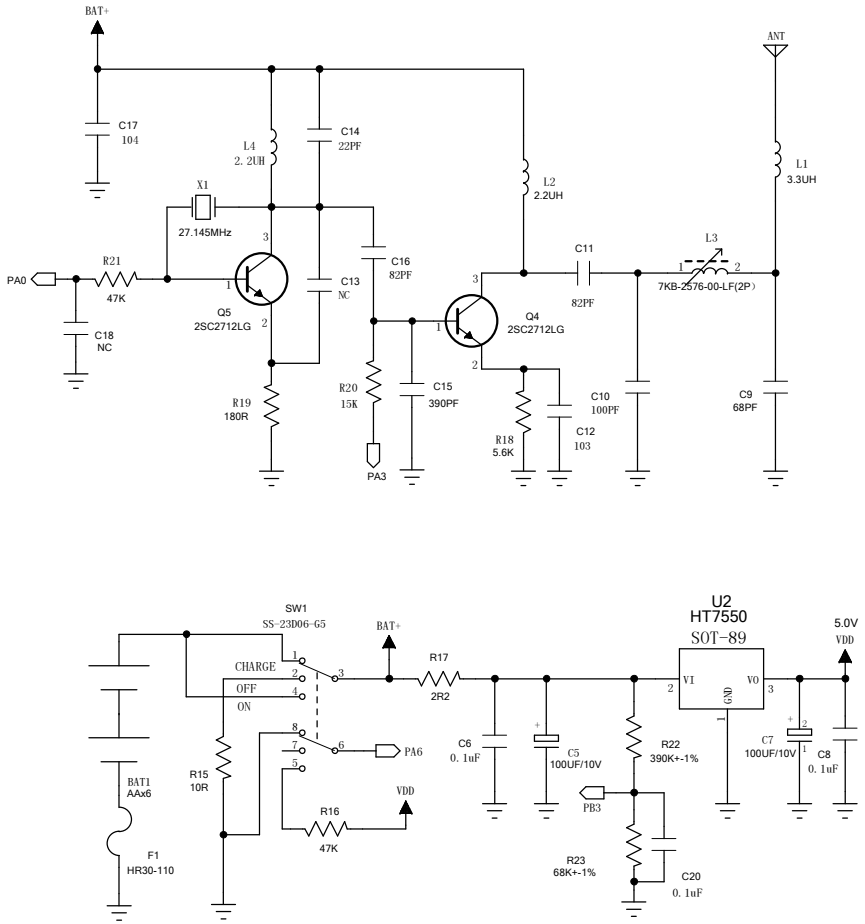

惠州市欧雅兴实业有限公司		
SCHEMATIC CIRCUIT	DOCUMENT NO.:	
Project Name: 飞龙TX（27MHz）		
ITEM NO.:	DWG. NO.:	REV: 00
DRAWN: YKS	DATE: 2013.04.18	
CHECKED:	DATE:	SHEET:
APP. BY:	DATE:	1 OF 1