THIS DOCUMENT CONTAINS PROPRIETARY INFORMATION AND SUCH INFORMATION MAY
NOT BE DISCLOSED TO OTHERS FOR ANY PURPOSE NOR FOR MANUFACTURING
PURPOSES WITHOUT WRITTEN PERMISSION FROM AIRPORT SYSTEMS INTERNATIONAL, INC.

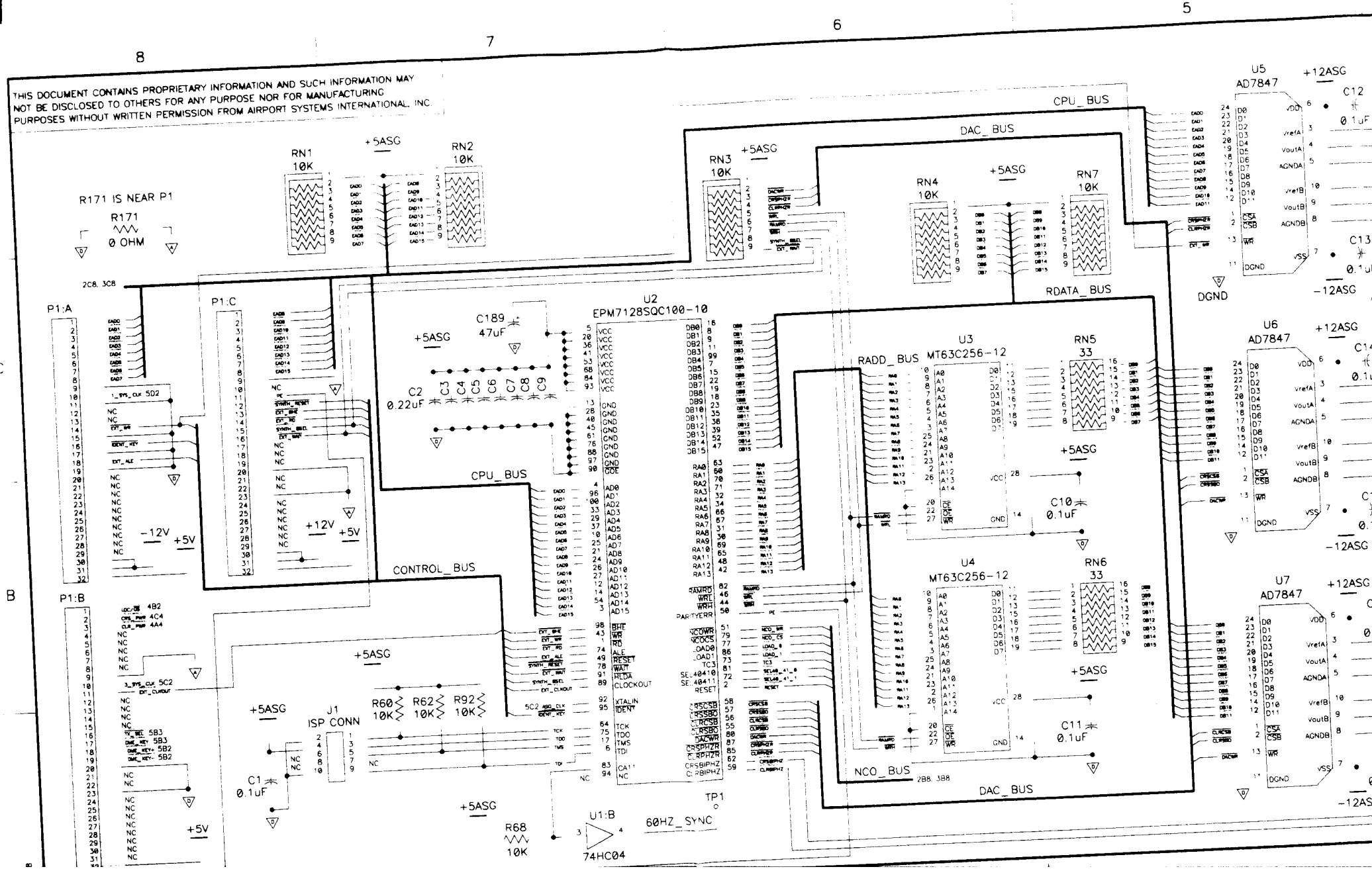

DWG NO 012012-9001 SH 1 REV C

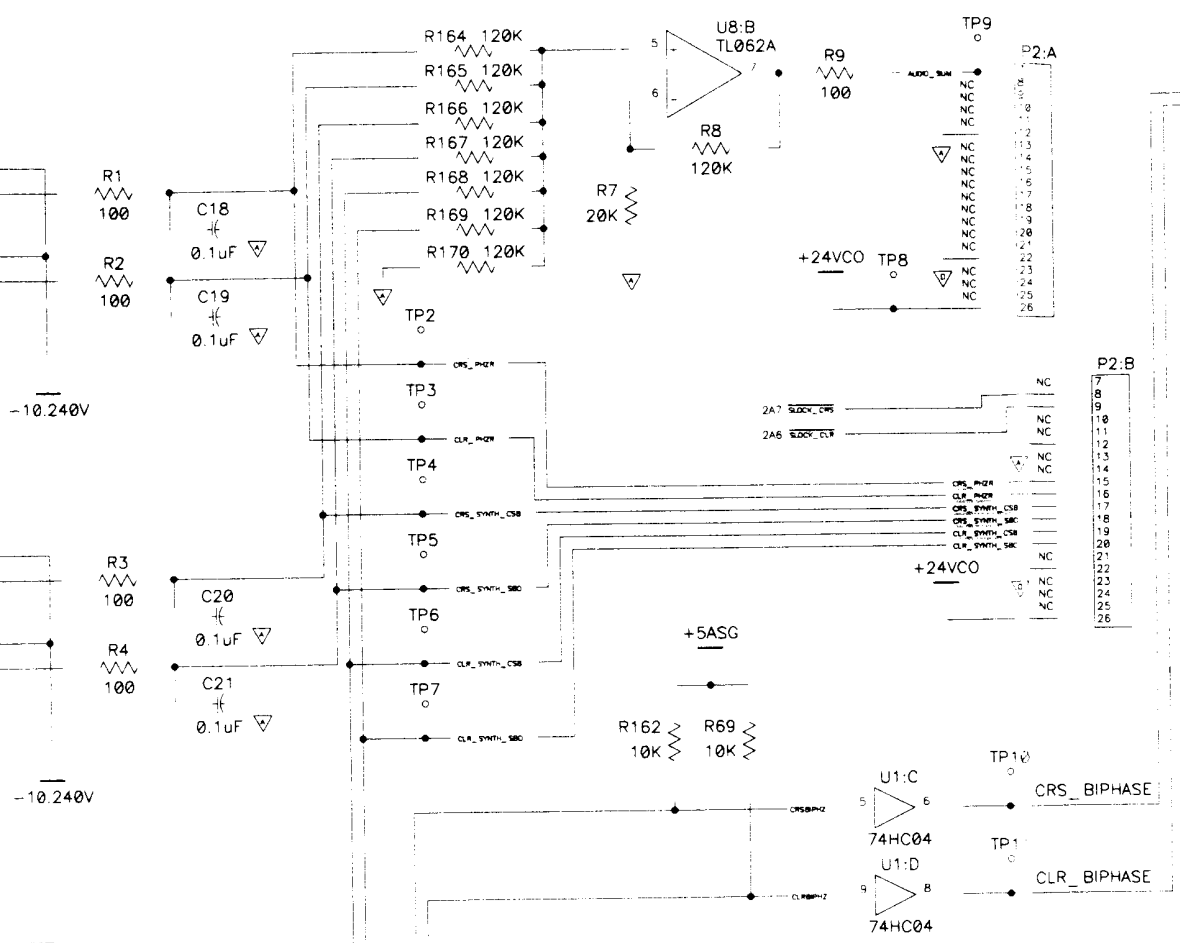

REVISIONS

REV	DESCRIPTION	DATE	APPROVED
1	1st PROTOTYPE	5/7/97	ROTHWEL
2	2nd PROTOTYPE	10/24/97	ROTHWEL
–	RELEASED PER ERN LC00720	3/24/98	ROTHWEL
A	REVISED PER ECO 2100-109	5/26/98	ROTHWEL
B	SEE SH2 & SH5. ECO 2100-191	7/13/98	ROTHWEL
C	SEE SH4. ECO 2100-261	8/5/98	ROTHWEL

B	C	A	B	C	REVISION	REVISION STATUS OF SHEETS
5	4	3	2	1	SHEETS	

DASH NO	NEXT ASSY	USED ON
0001	012012-0001	CATII/III

APPLICATION

UNLESS OTHERWISE SPECIFIED
DIMENSIONS ARE IN INCHES
TOLERANCES ARE
ANGLES
DECIMALS
.XX .XXX

MATERIAL

FINISH

CONTRACT NO

APPROVALS		DATE
DRAWN	RAY SCOTT	3/7/97
CHECKED	RIEKE	3/24/98
ENGR	K RIEKE	3/24/98

ACCEL GENERATED

AIRPORT SYSTEMS INTERNATIONAL, INC.
11300 W. 89th St. • OVERLAND PARK, KS

SCHEMATIC DIAGRAM
SYNTHESIZER

SIZE	CAGE CODE	DWG NO
G	64415	012012-9001

SCALE		SHEET
NONE	SCHEMATIC DIAGRAM	1 OF 5

DWG NO 012012-9001 SH 2 REV B

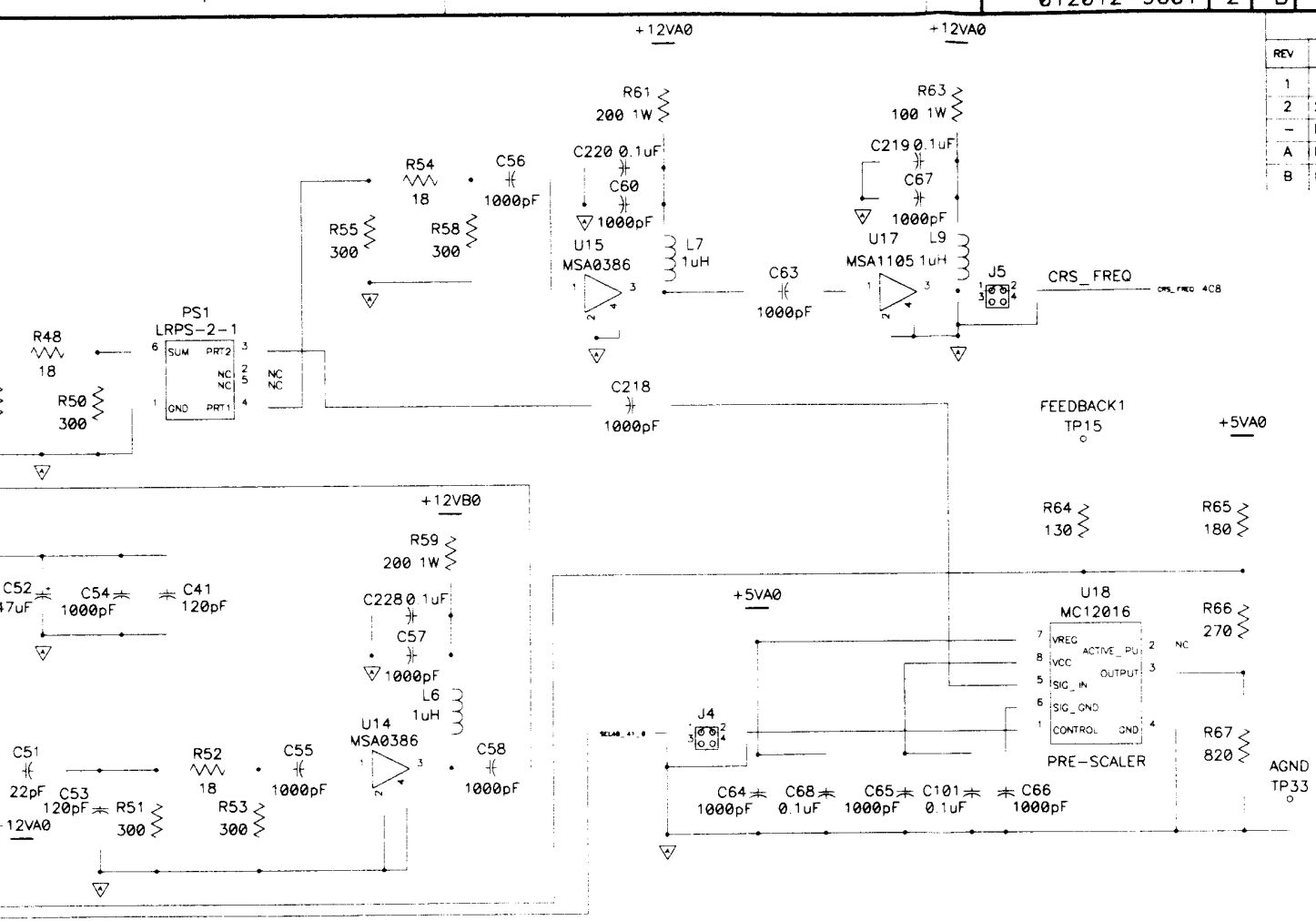

REVISIONS

REV	DESCRIPTION	DATE	APPROVED
1	1st PROTOTYPE	5/7/97	ROTHWELL
2	2ND PROTOTYPE	10/24/97	ROTHWELL
–	RELEASED PER ERN LC00720	3/24/98	ROTHWELL
A	REVISED PER ECO 2100-109	5/26/98	ROTHWELL
B	REMOVED CR1, ECO 2100-191	7/13/98	ROTHWELL

LS LOCKED

AIRPORT SYSTEMS INTERNATIONAL, INC.
11300 W. 89th St. • OVERLAND PARK, KS

DRAWN RAY SCOTT	3/7/97	SIZE G	CAGE CODE 64415	DWG NO 012012-9001	REV B
CONTRACT NO.		SCALE NONE		SHEET 2 OF 5

THIS DOCUMENT CONTAINS PROPRIETARY INFORMATION AND SUCH INFORMATION MAY NOT BE DISCLOSED TO OTHERS FOR ANY PURPOSE NOR FOR MANUFACTURING PURPOSES WITHOUT WRITTEN PERMISSION FROM AIRPORT SYSTEMS INTERNATIONAL, INC.

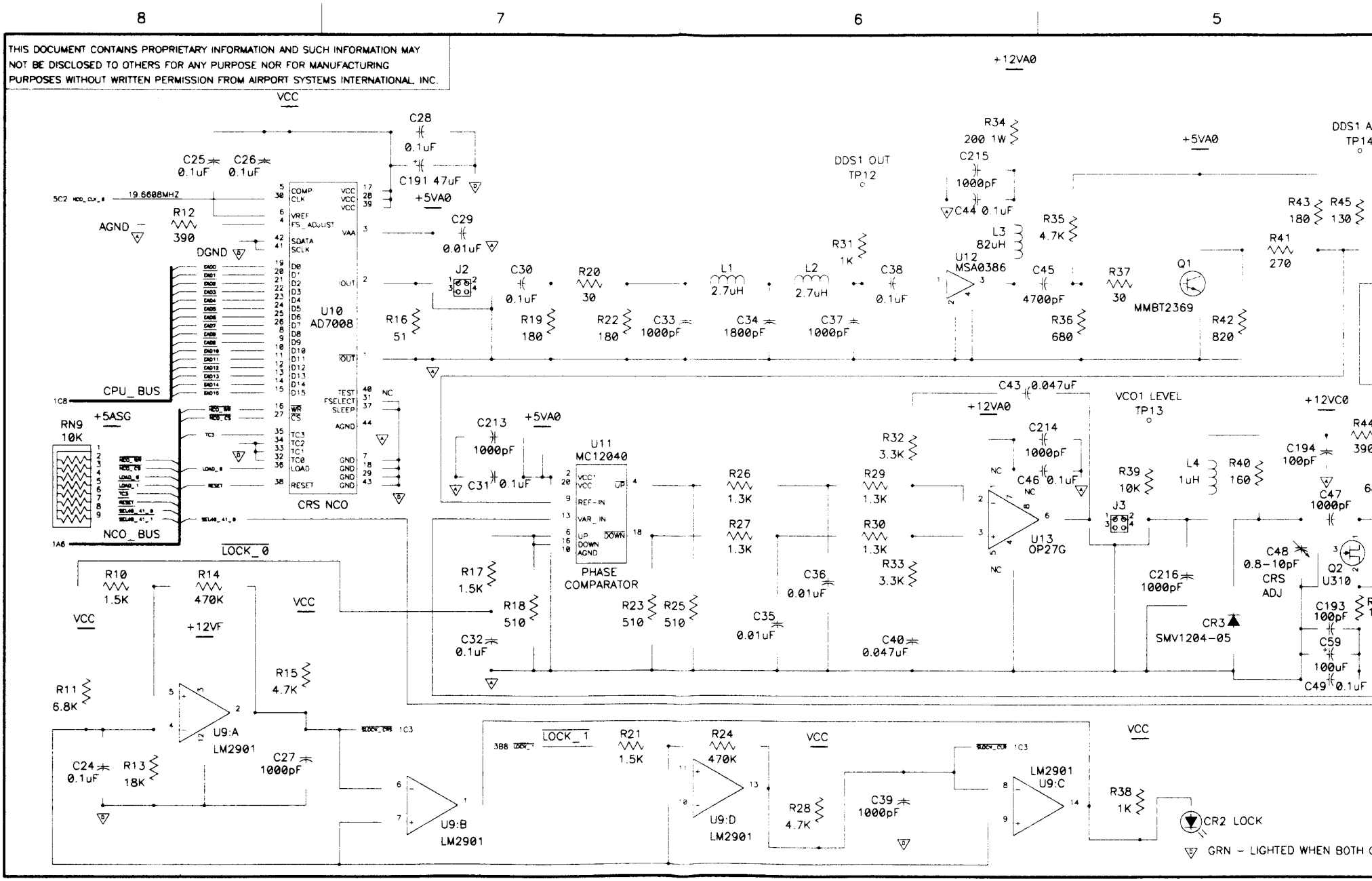

THIS DOCUMENT CONTAINS PROPRIETARY INFORMATION AND SUCH INFORMATION MAY NOT BE DISCLOSED TO OTHERS FOR ANY PURPOSE NOR FOR MANUFACTURING PURPOSES WITHOUT WRITTEN PERMISSION FROM AIRPORT SYSTEMS INTERNATIONAL, INC.

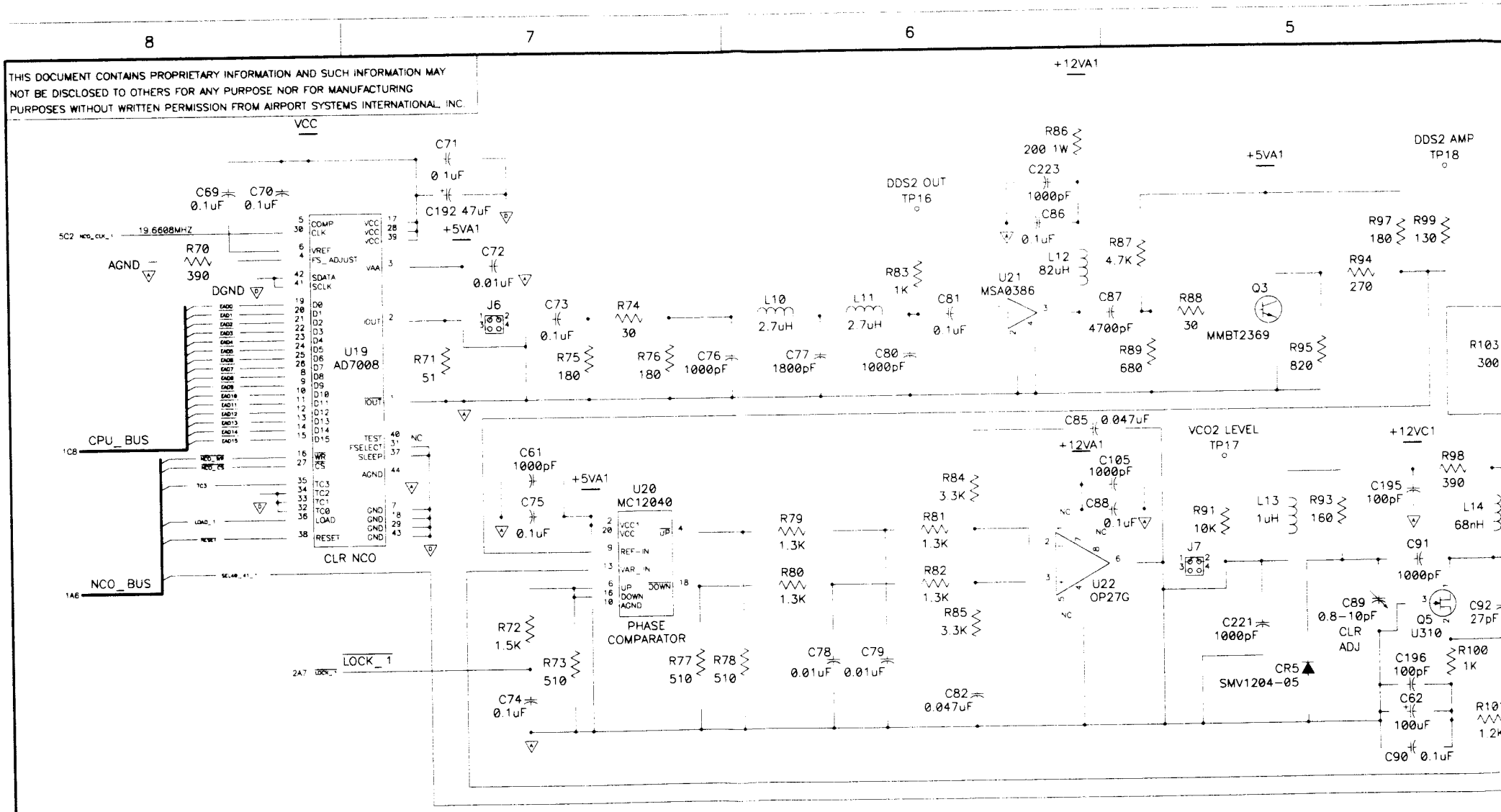

DWG NO. 012012-9001 SH 3 REV A

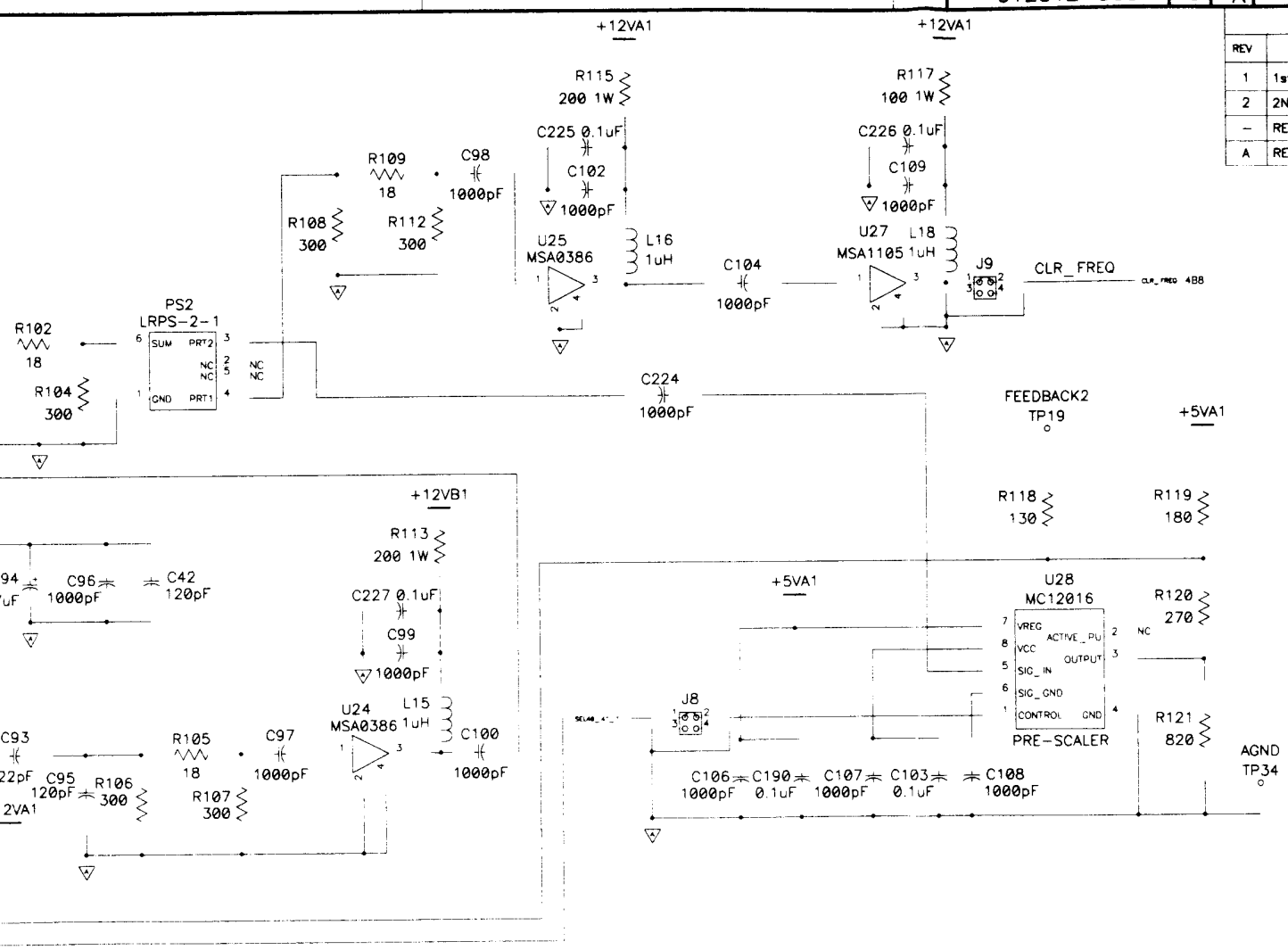

REVISIONS

REV	DESCRIPTION	DATE	APPROVED
1	1st PROTOTYPE	5/7/97	ROTHWELL
2	2ND PROTOTYPE	10/24/97	ROTHWELL
–	RELEASED PER ERN LC00720	3/24/98	ROTHWELL
A	REVISED PER ECO 2100-109	5/26/98	ROTHWELL

AIRPORT SYSTEMS INTERNATIONAL, INC.
11300 W. 89th St. OVERLAND PARK, KS

DRAWN	RAY SCOTT	3/7/97	
CONTRACT NO.			

SIZE	CAGE CODE	DWG NO.	RH
G	64415	012012-9001	A
SCALE NONE			SHEET 3 OF 5

REVISIONS			
REV	DESCRIPTION	DATE	APPROVED
1	1st PROTOTYPE	5/7/97	ROTHWELL
2	2ND PROTOTYPE	10/24/97	ROTHWELL
–	RELEASED PER ERN LC00720	3/24/98	ROTHWELL
A	REVISED PER ECO 2100-109	5/26/98	ROTHWELL
C	R173 & R175 WERE 47K, ECO 2100-261	8/5/98	ROTHWELL

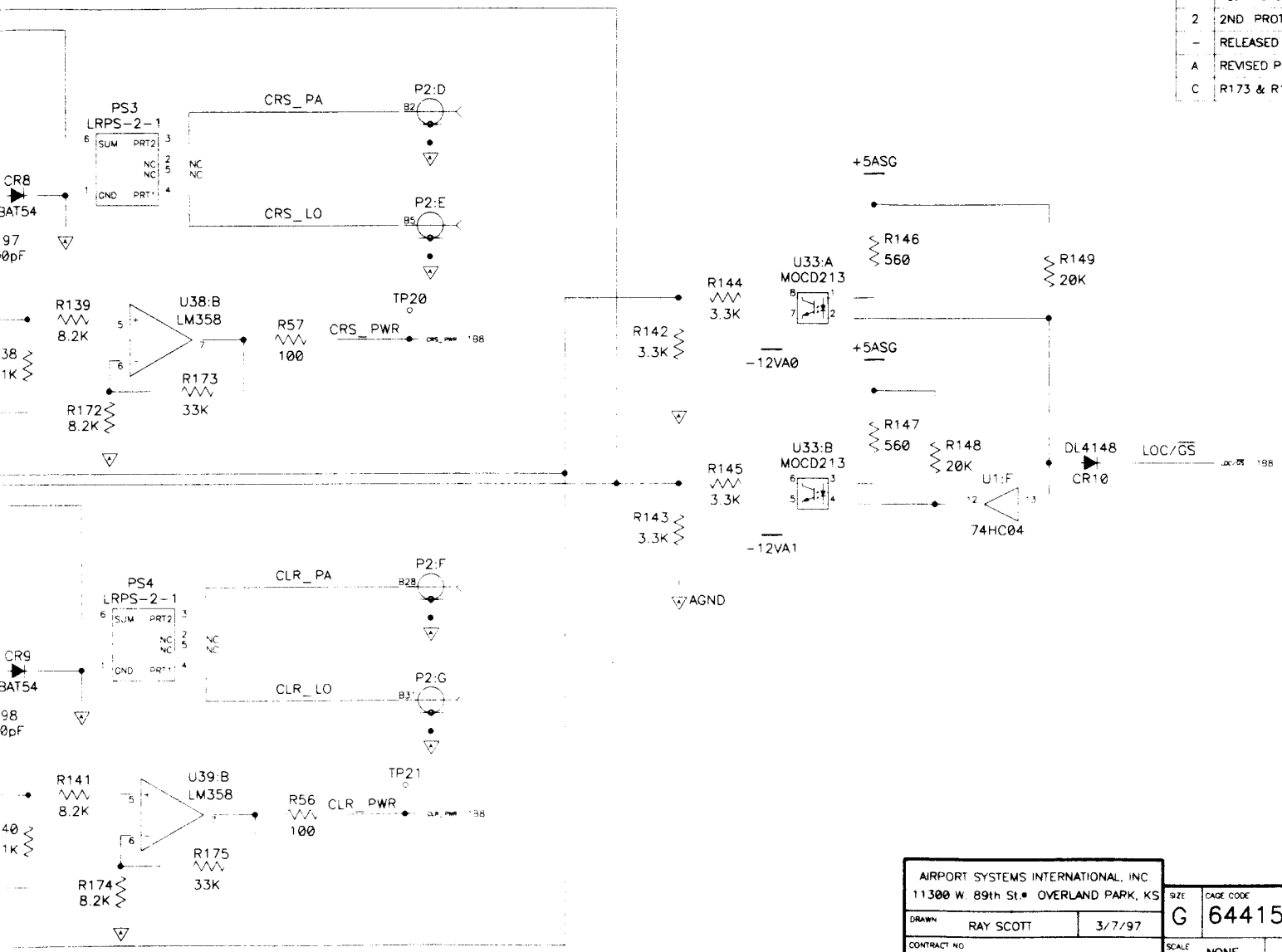

AIRPORT SYSTEMS INTERNATIONAL, INC. 11300 W. 89th St. • OVERLAND PARK, KS	SIZE G	CAGE CODE 64415	DWG NO 012012-9001
DRAWN RAY SCOTT 3/7/97			
CONTRACT NO	SCALE NONE		SHEET 4 OF 5

THIS DOCUMENT CONTAINS PROPRIETARY INFORMATION AND SUCH INFORMATION MAY NOT BE DISCLOSED TO OTHERS FOR ANY PURPOSE NOR FOR MANUFACTURING PURPOSES WITHOUT WRITTEN PERMISSION FROM AIRPORT SYSTEMS INTERNATIONAL, INC.

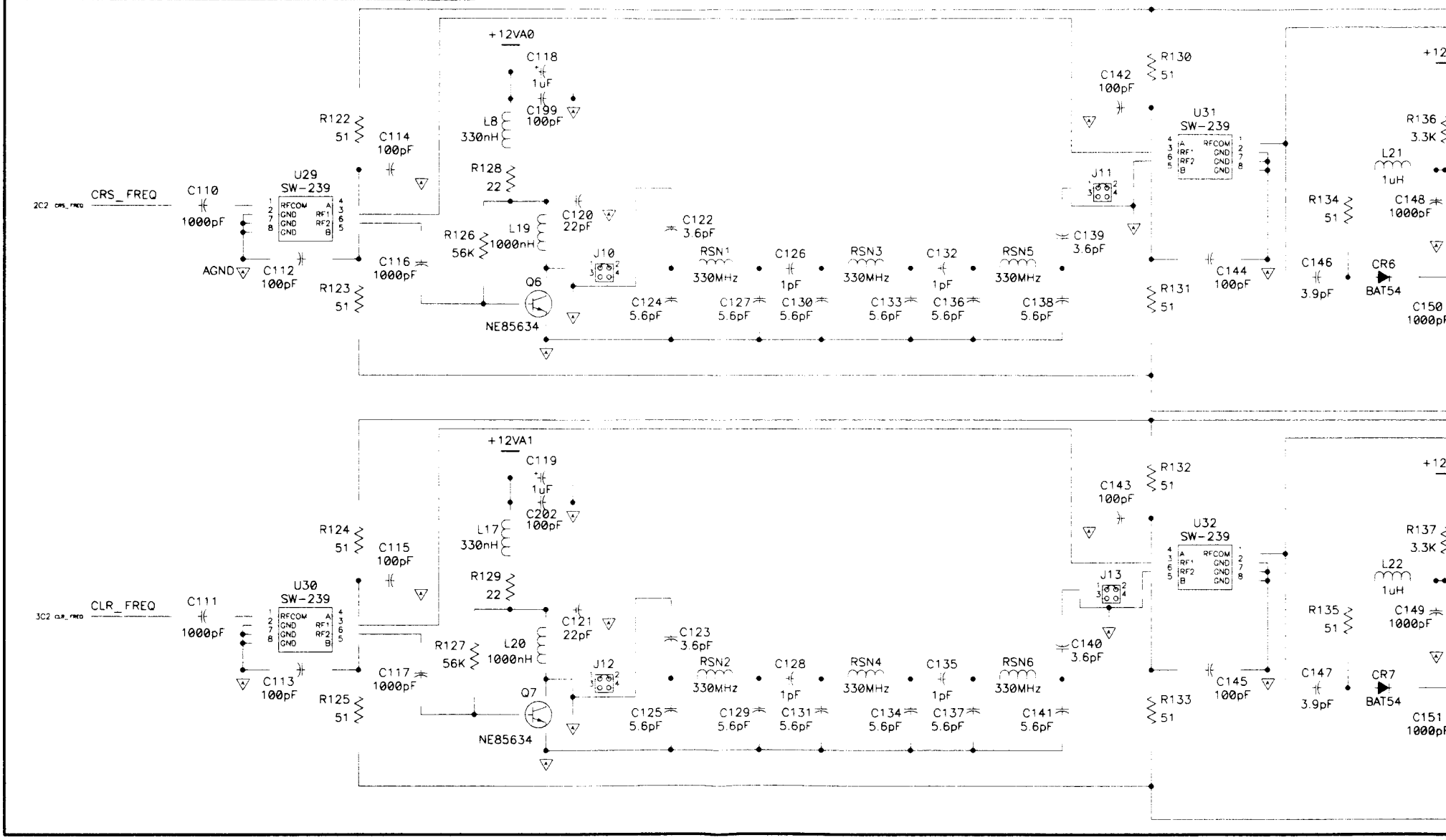

Wed Aug 05 1998
15:17:44

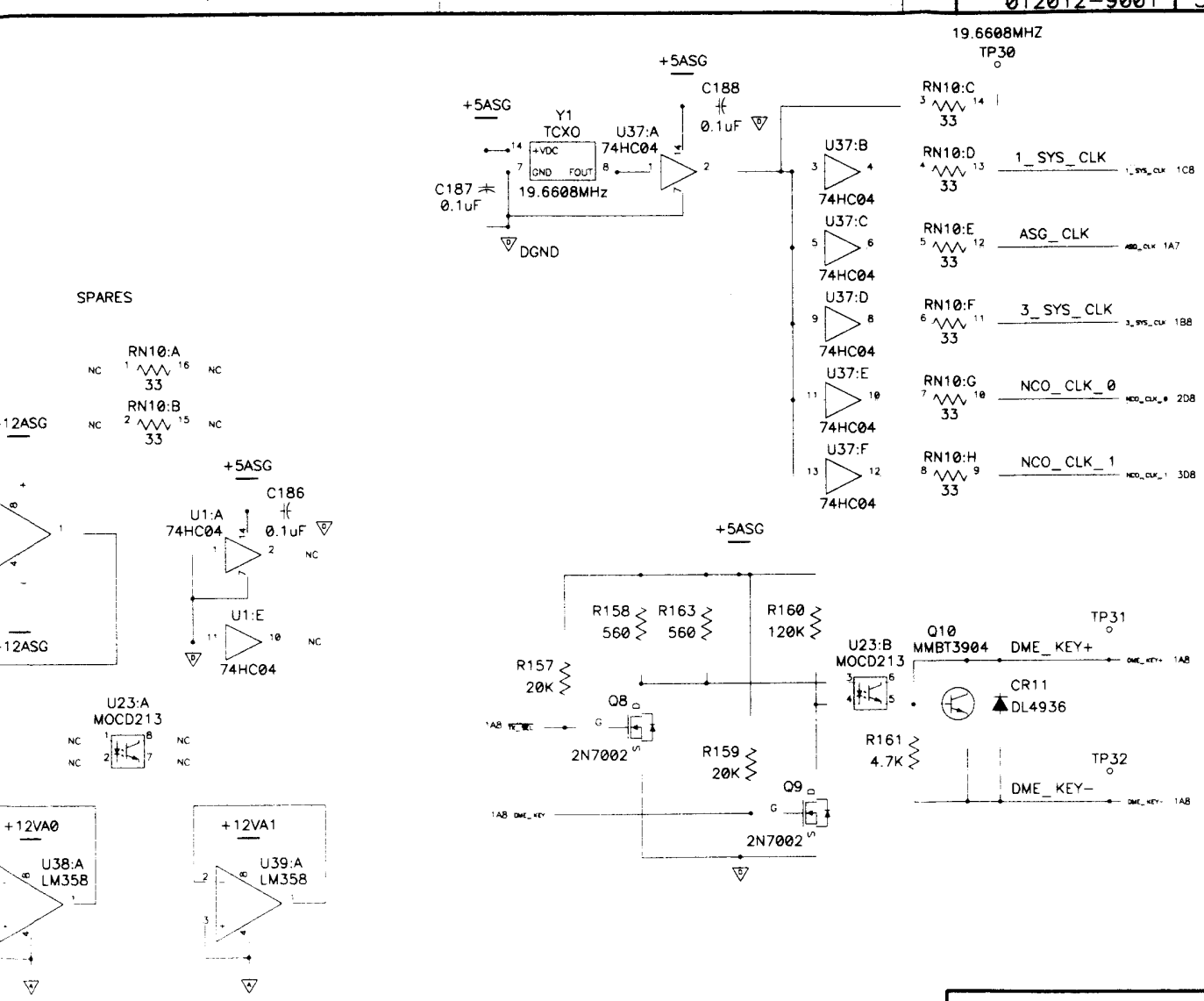

REVISIONS

REV	DESCRIPTION	DATE	APPROVED
1	1st PROTOTYPE	5/7/97	ROTHWELL
2	2ND PROTOTYPE	10/24/97	ROTHWELL
–	RERLEASED PER ERN LC00720	3/24/98	ROTHWELL
A	REVISED PER ECO 2100-109	5/26/98	ROTHWELL
B	REMOVED CR4, ECO 2100-191	7/13/98	ROTHWELL

AIRPORT SYSTEMS INTERNATIONAL, INC.
11300 W. 89th St. OVERLAND PARK, KS

DRAWN	RAY SCOTT	3/7/97	
CONTRACT NO			
SIZE G	CAGE CODE 64415	DWG. NO. 012012-9001	B
SCALE NONE		SHEET 5 OF 5	

THIS DOCUMENT CONTAINS PROPRIETARY INFORMATION AND SUCH INFORMATION MAY NOT BE DISCLOSED TO OTHERS FOR ANY PURPOSE NOR FOR MANUFACTURING PURPOSES WITHOUT WRITTEN PERMISSION FROM AIRPORT SYSTEMS INTERNATIONAL, INC.

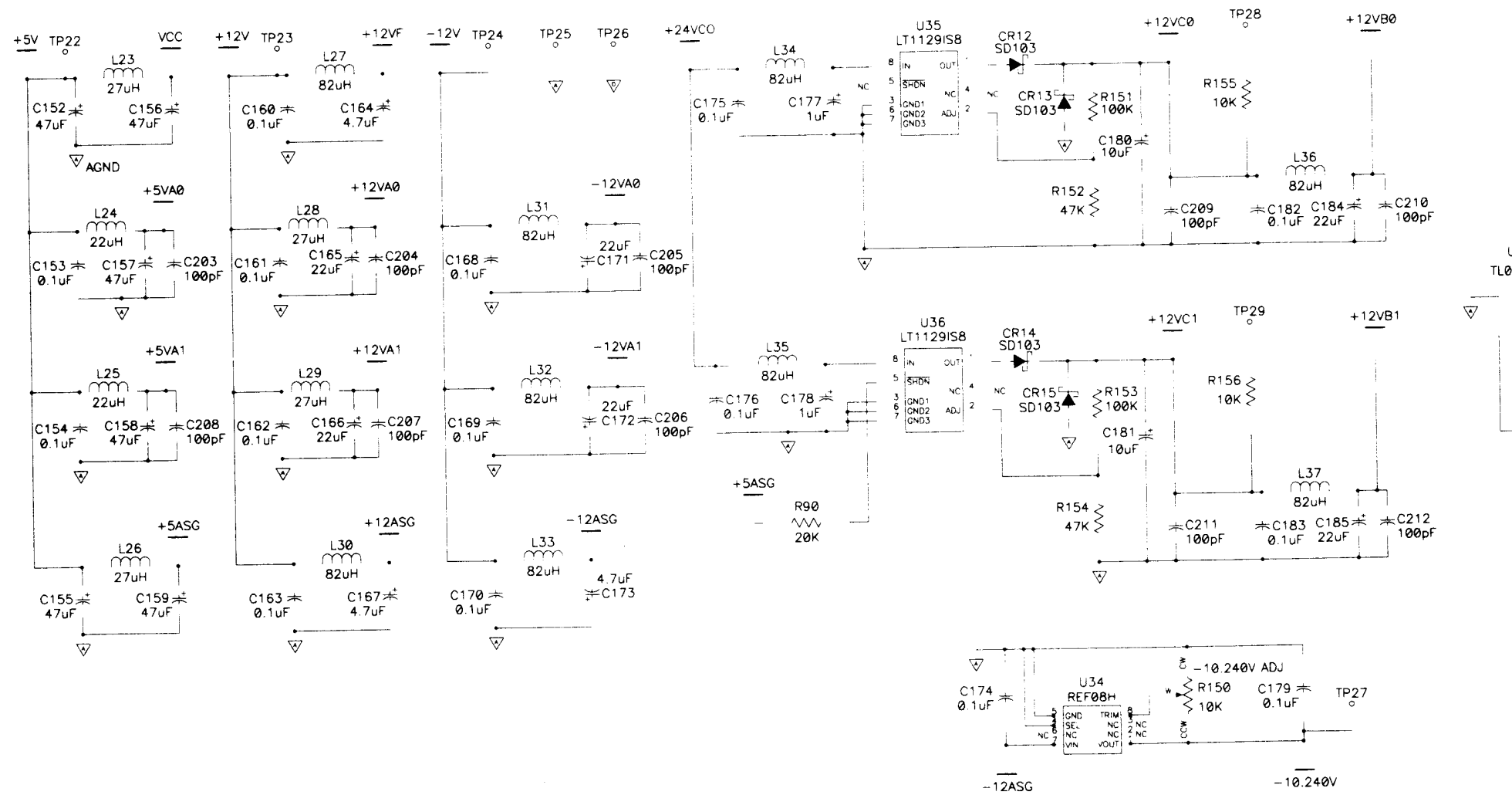

DWG NO. 012030-9001 SH 1 REV D

REVISIONS			
REV	DESCRIPTION	DATE	APPROVED
1	1st PROTOTYPE	4/2/98	DESMON
–	RELEASED PER ERN LC00787	6/22/98	ROTHW
A	REVISED PER ECO 2100-190	6/30/98	ROTHW
B	REVISED PER ECO 2100-194	6/30/98	ROTHW
C	REVISED PER ECO 2110-19	7/17/98	ROTHW
D	R12 WAS 1K, ECO 2110-25	8/6/98	ROTHW

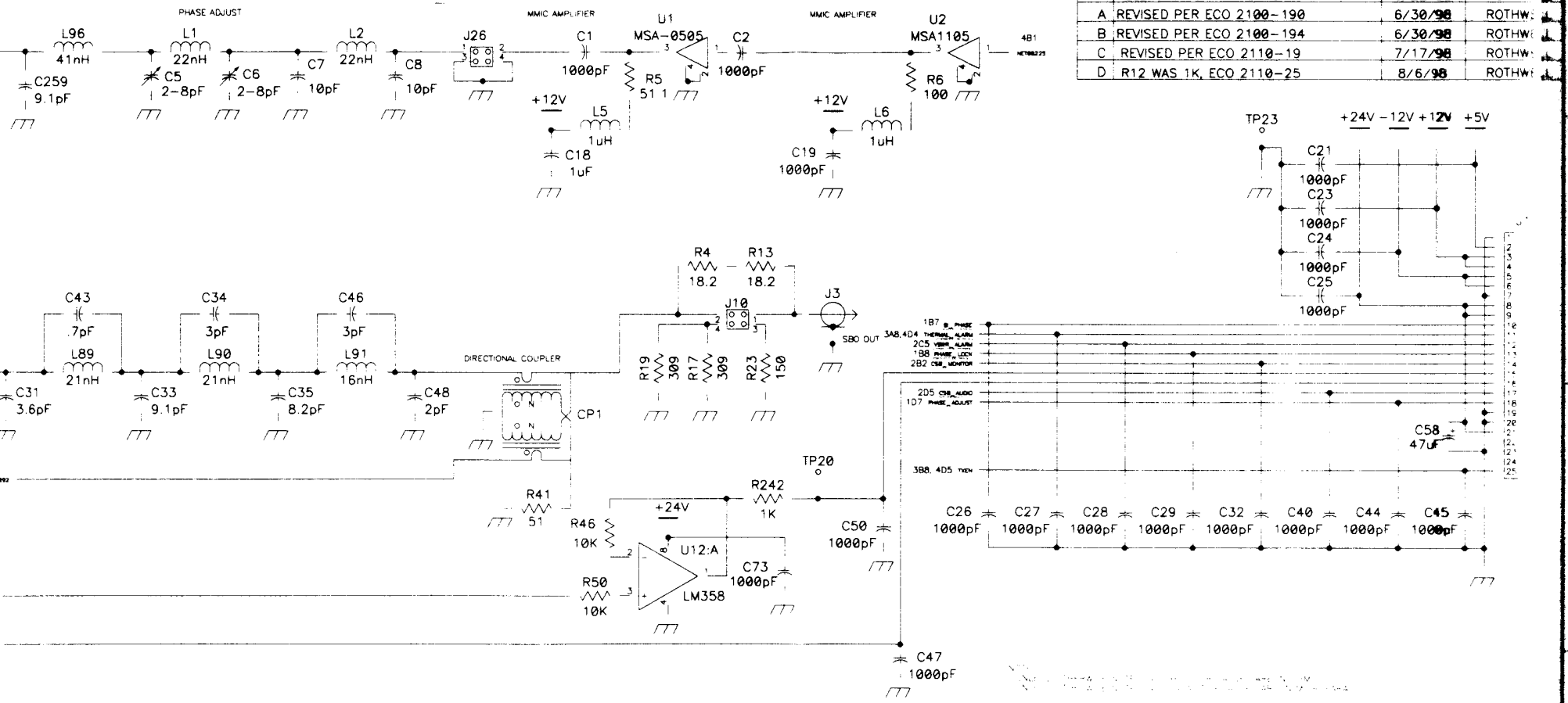

R35 10K

B	B	B	C	B	D	REVISION	REVISION STATUS OF SHEETS
6	5	4	3	2	1	SHEETS	

DASH NO.	NEXT ASSY	USED ON
9001	012030-0001	CATII/III
APPLICATION		

UNLESS OTHERWISE SPECIFIED: DIMENSIONS ARE IN INCHES. TOLERANCES ARE: ANGLES, DECIMALS .XX .XXX

MATERIAL:

FINISH:

CONTRACT NO.

APPROVALS		DATE
DRAWN	DESMOND	4/2/98
CHECKED	BRASE	6/23/98
ENGR	JOHN C. ROOS	6/23/98

ACCEL GENERATED

AIRPORT SYSTEMS INTERNATIONAL, INC.
11300 W. 89th St. • OVERLAND PARK, KS

GLIDESLOPE POWER AMPLIFIER

SIZE G | CAGE CODE 64415 | DWG NO 012030-9001

SCALE | Thu Aug 06 1998 | SHEET 1 OF 6

THIS DOCUMENT CONTAINS PROPRIETARY INFORMATION AND SUCH INFORMATION MAY NOT BE DISCLOSED TO OTHERS FOR ANY PURPOSE NOR FOR MANUFACTURING PURPOSES WITHOUT WRITTEN PERMISSION FROM AIRPORT SYSTEMS INTERNATIONAL, INC.

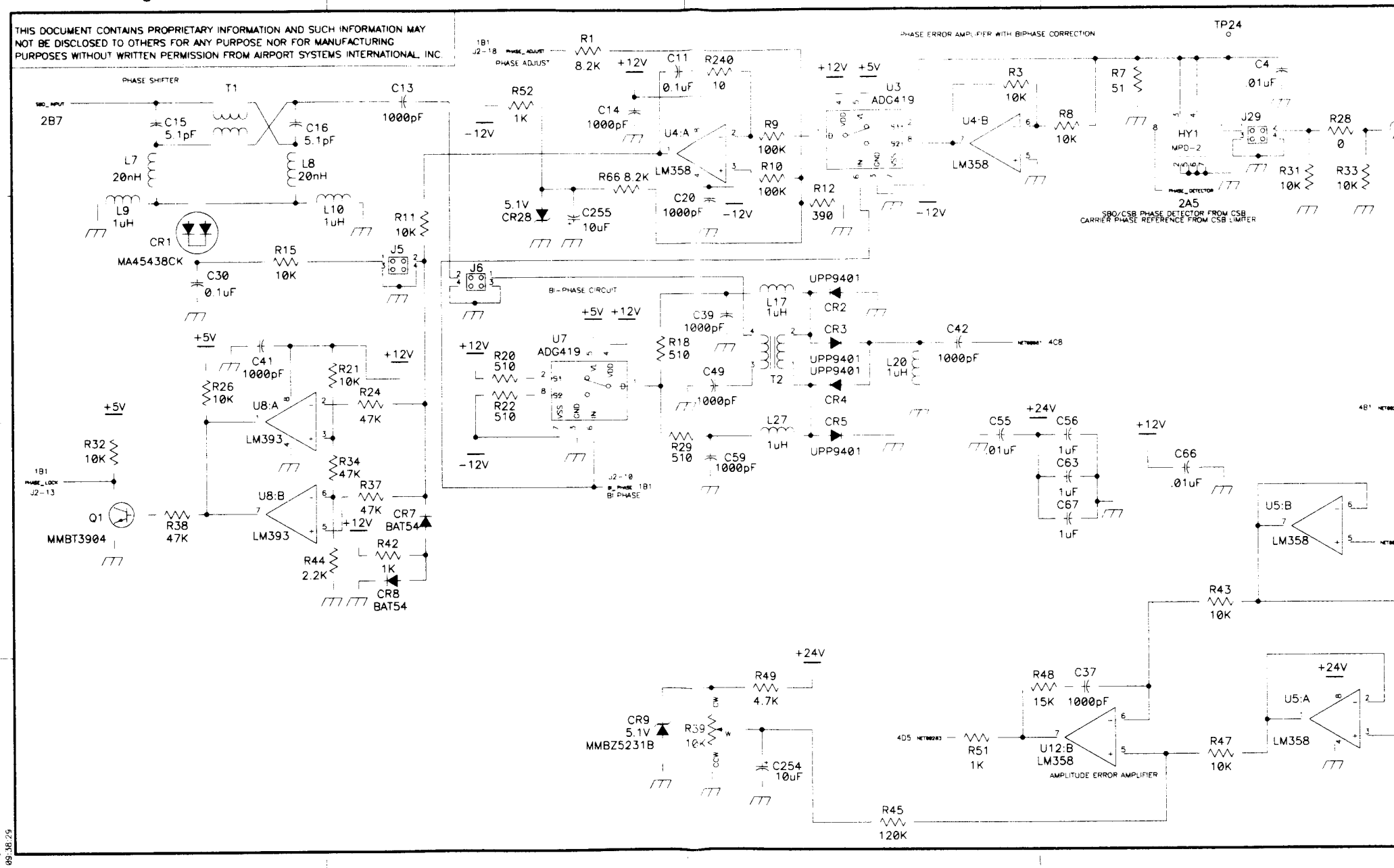

DWG NO 012030-9001 SH 2 REV B

REVISIONS			
REV	DESCRIPTION	DATE	APPROVED
1	1st PROTOTYPE	4/2/98	DESMOND
–	RELEASED PER ERN LC00787	6/22/98	ROTHWELL
A	REVISED PER ECO 2100-190	6/30/98	ROTHWELL
B	REVISED PER ECO 2100-194	6/30/98	ROTHWELL

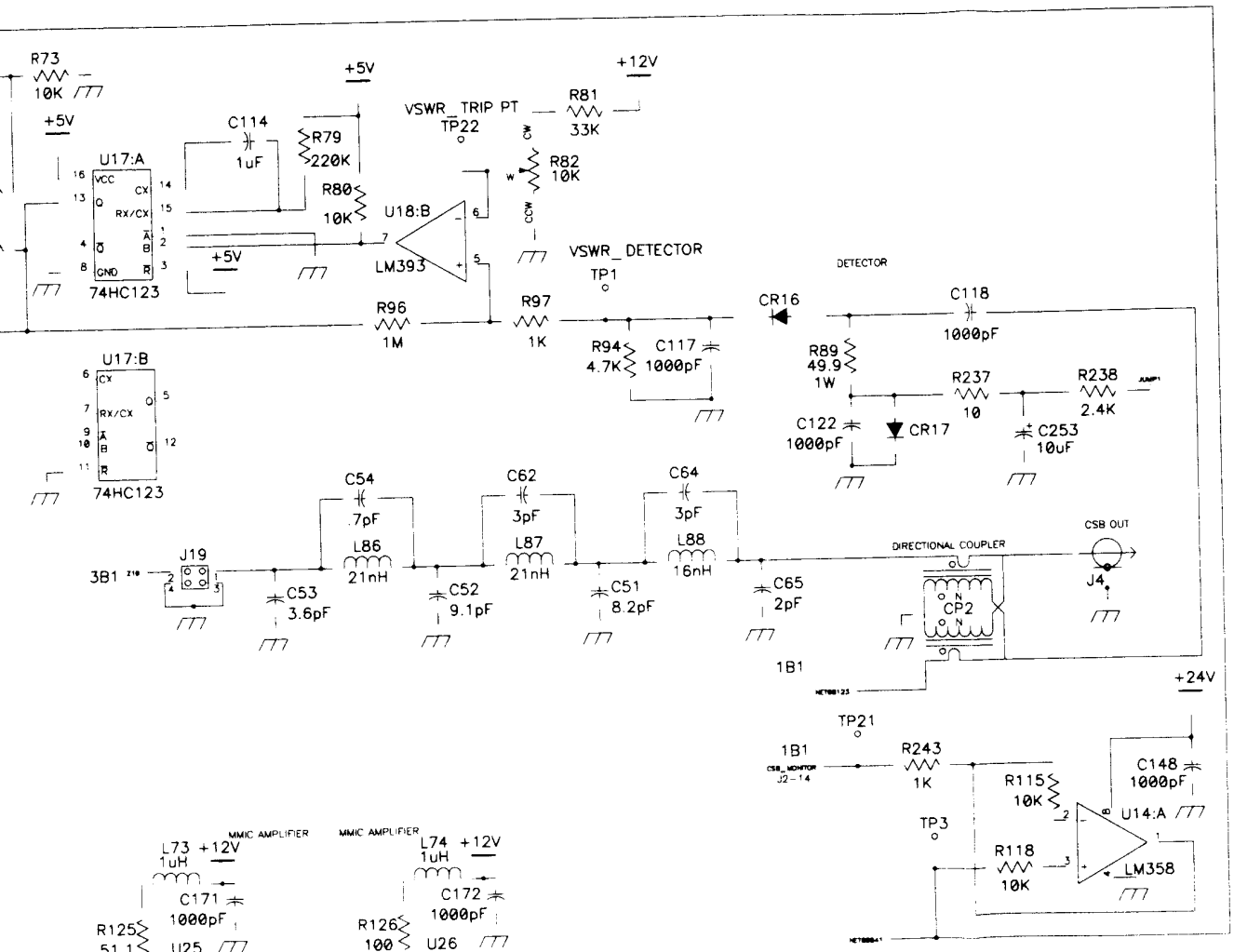

AIRPORT SYSTEMS INTERNATIONAL, INC.
11300 W. 89th St. OVERLAND PARK, KS

DRAWN D DESMOND	4/2/98	SIZE G	CAGE CODE 64415
CONTRACT NO.		SCALE NONE	SCHEMATIC DIAGRAM
DWG. NO. 012030-9001		SHEET 2 OF 6	

Sht 2 of 6

THIS DOCUMENT CONTAINS PROPRIETARY INFORMATION AND SUCH INFORMATION MAY NOT BE DISCLOSED TO OTHERS FOR ANY PURPOSE NOR FOR MANUFACTURING PURPOSES WITHOUT WRITTEN PERMISSION FROM AIRPORT SYSTEMS INTERNATIONAL, INC.

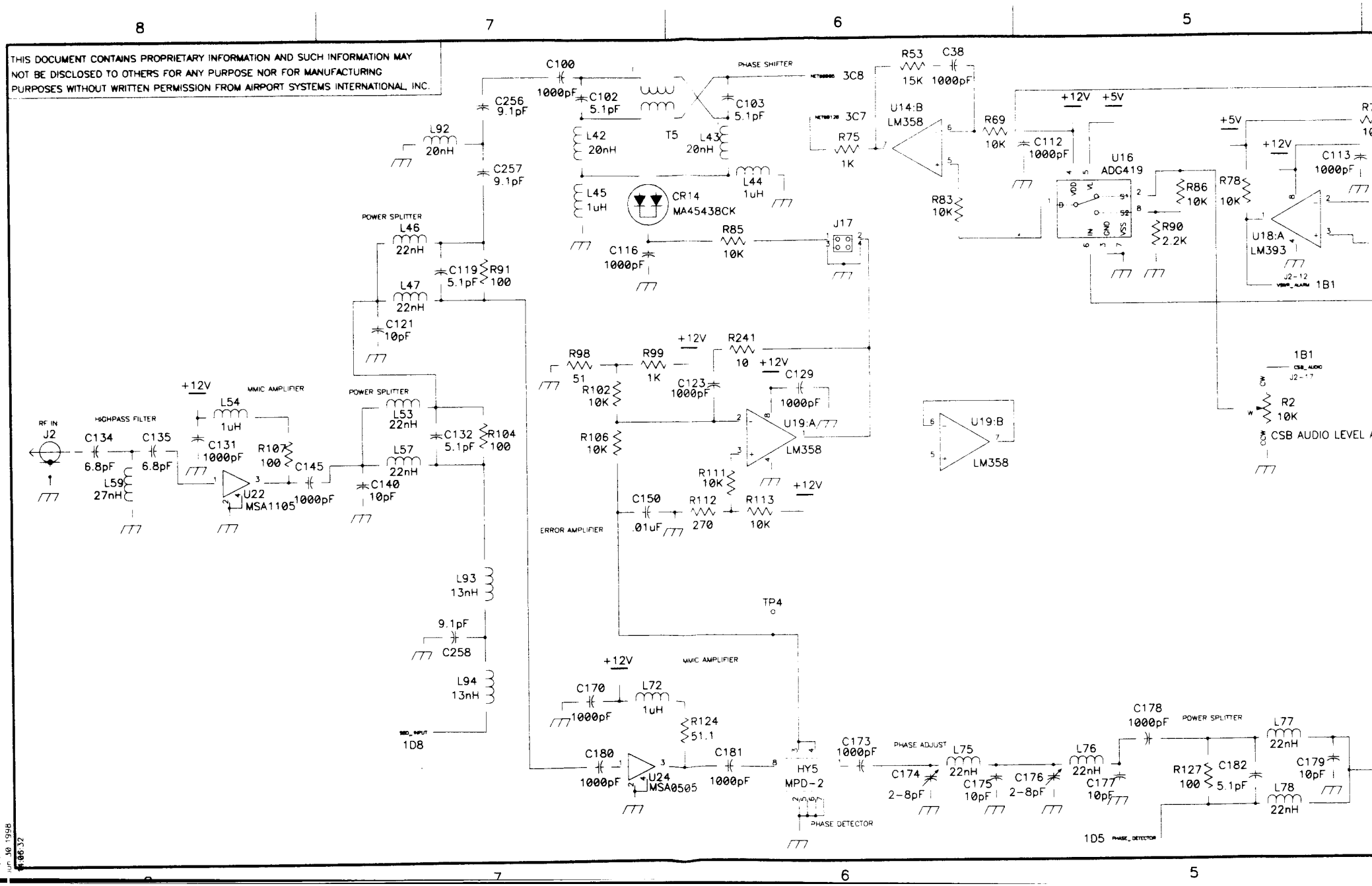

DWG NO. 012030-9001 SH 3 REV C

REVISIONS			
REV	DESCRIPTION	DATE	APPROVED
1	1st PROTOTYPE	4/2/98	DESMON
–	RELEASED PER ERN LC00787	6/22/98	ROTHWE
A	REVISED PER ECO 2100-190	6/30/98	ROTHWE
B	REVISED PER ECO 2100-194	6/30/98	ROTHWE
C	REVISED PER ECO 2110-19	7/17/98	ROTHWE

CSB FINAL AMPLIFIER

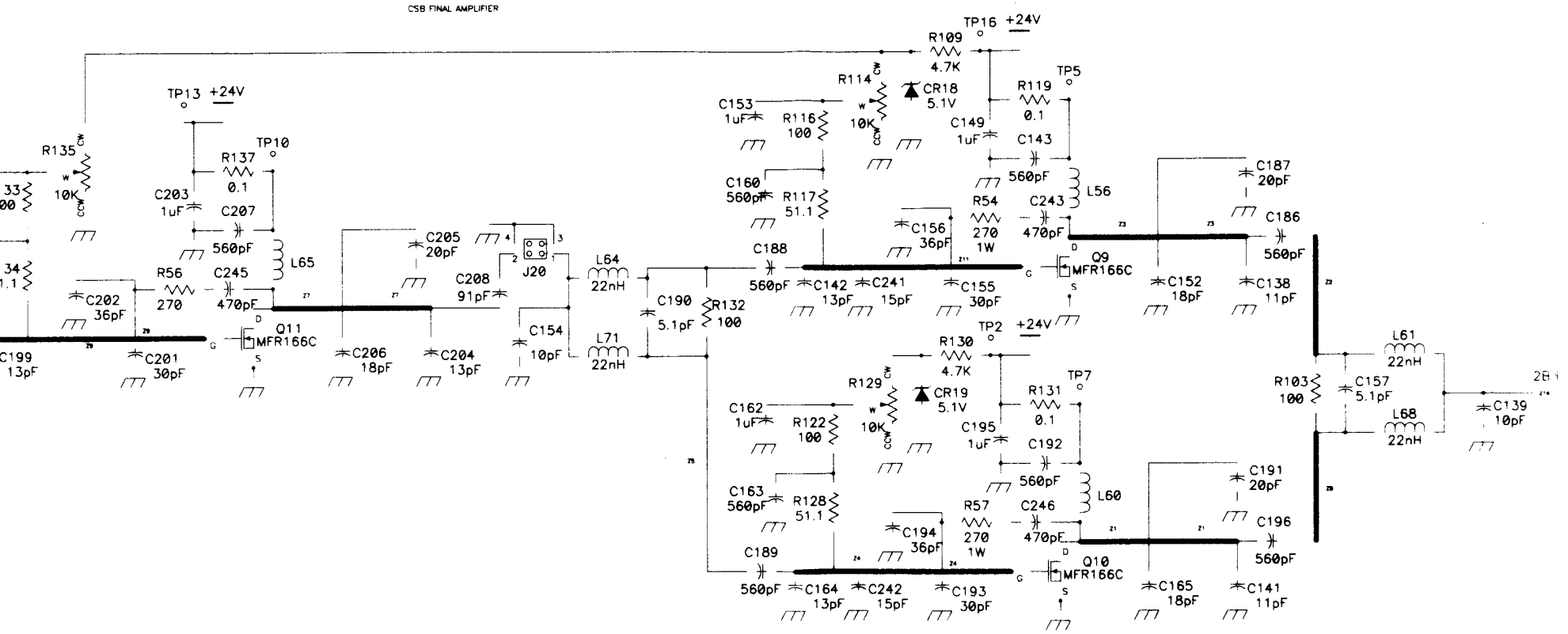

AIRPORT SYSTEMS INTERNATIONAL, INC. 11300 W. 89th St.• OVERLAND PARK, KS	SIZE G	CAGE CODE 64415	DWG. NO. 012030-9001
DRAWN D DESMOND 4/2/98	SCALE NONE	SCHEMATIC DIAGRAM	SHEET 3 OF 6
CONTRACT NO			

THIS DOCUMENT CONTAINS PROPRIETARY INFORMATION AND SUCH INFORMATION MAY NOT BE DISCLOSED TO OTHERS FOR ANY PURPOSE NOR FOR MANUFACTURING PURPOSES WITHOUT WRITTEN PERMISSION FROM AIRPORT SYSTEMS INTERNATIONAL, INC.

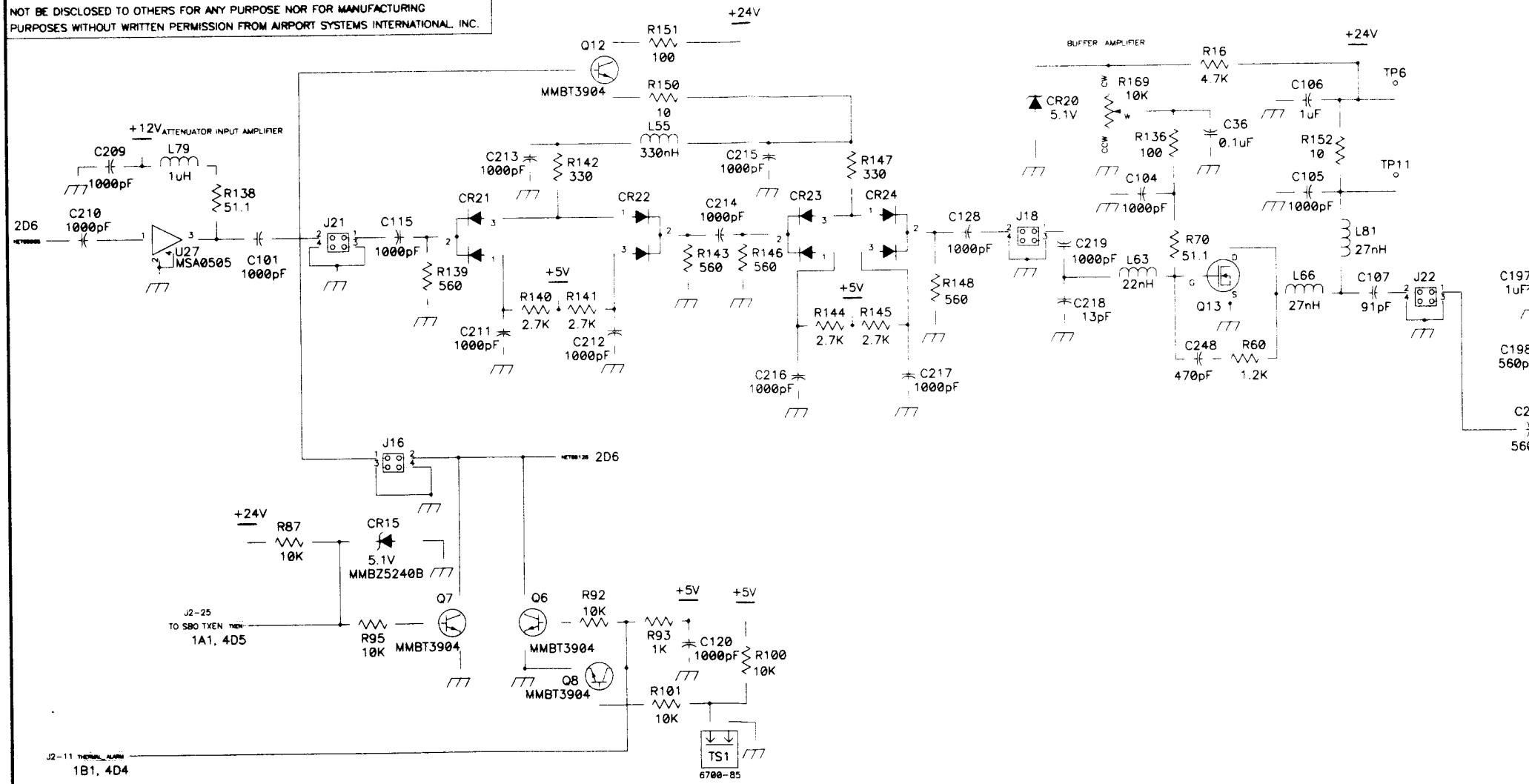

DWG NO.	SH	REV
012030-9001	4	B

REVISIONS

REV	DESCRIPTION	DATE	APPROVED
1	1st PROTOTYPE	4/2/98	DESMON
–	RELEASED PER ERN LC00787	6/22/98	ROTHWE
A	REVISED PER ECO 2100-190	6/30/98	ROTHWE
B	REVISED PER ECO 2100-194	6/30/98	ROTHWE

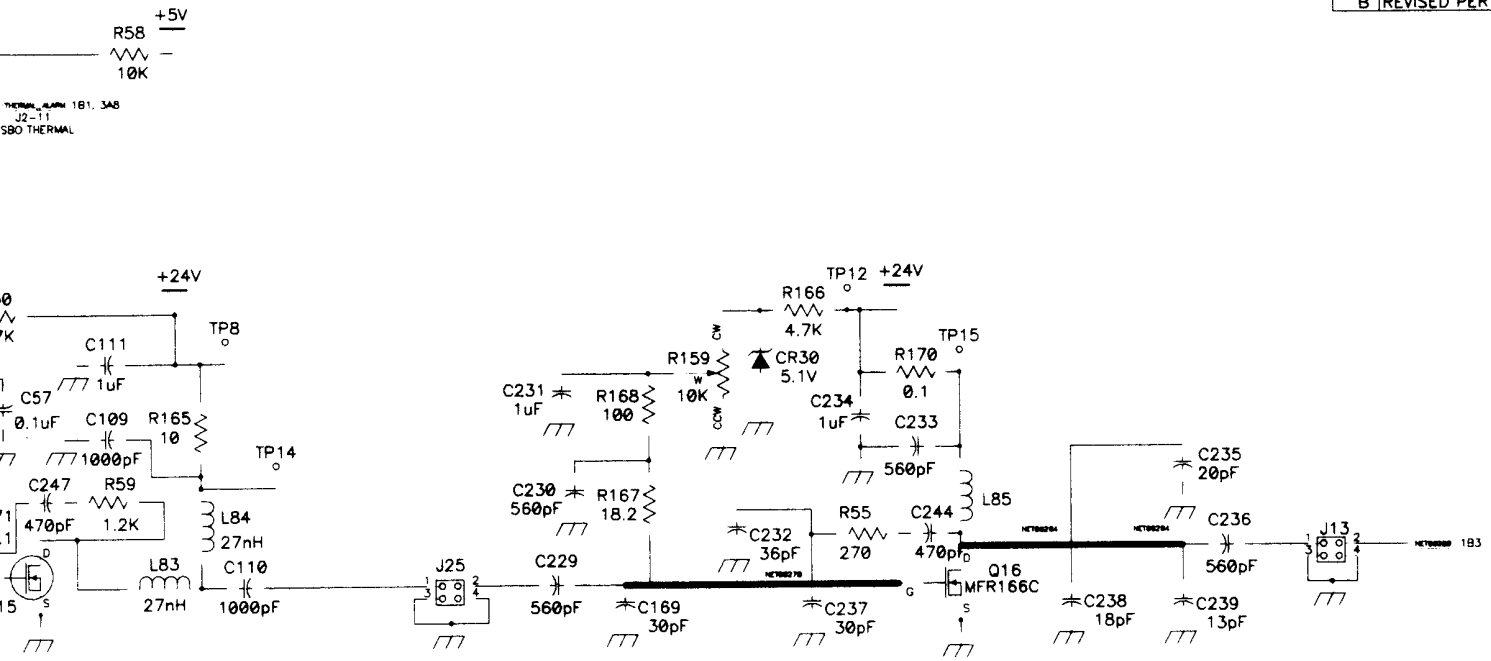

AIRPORT SYSTEMS INTERNATIONAL, INC.
11300 W. 89th St.• OVERLAND PARK, KS

DRAWN	D DESMOND	4/2/98
CONTRACT NO.		

SIZE	CAGE CODE	DWG. NO.	REV
G	64415	012030-9001	B
SCALE NONE	SCHEMATIC DIAGRAM	SHEET 4 OF 6	

THIS DOCUMENT CONTAINS PROPRIETARY INFORMATION AND SUCH INFORMATION MAY NOT BE DISCLOSED TO OTHERS FOR ANY PURPOSE NOR FOR MANUFACTURING PURPOSES WITHOUT WRITTEN PERMISSION FROM AIRPORT SYSTEMS INTERNATIONAL, INC.

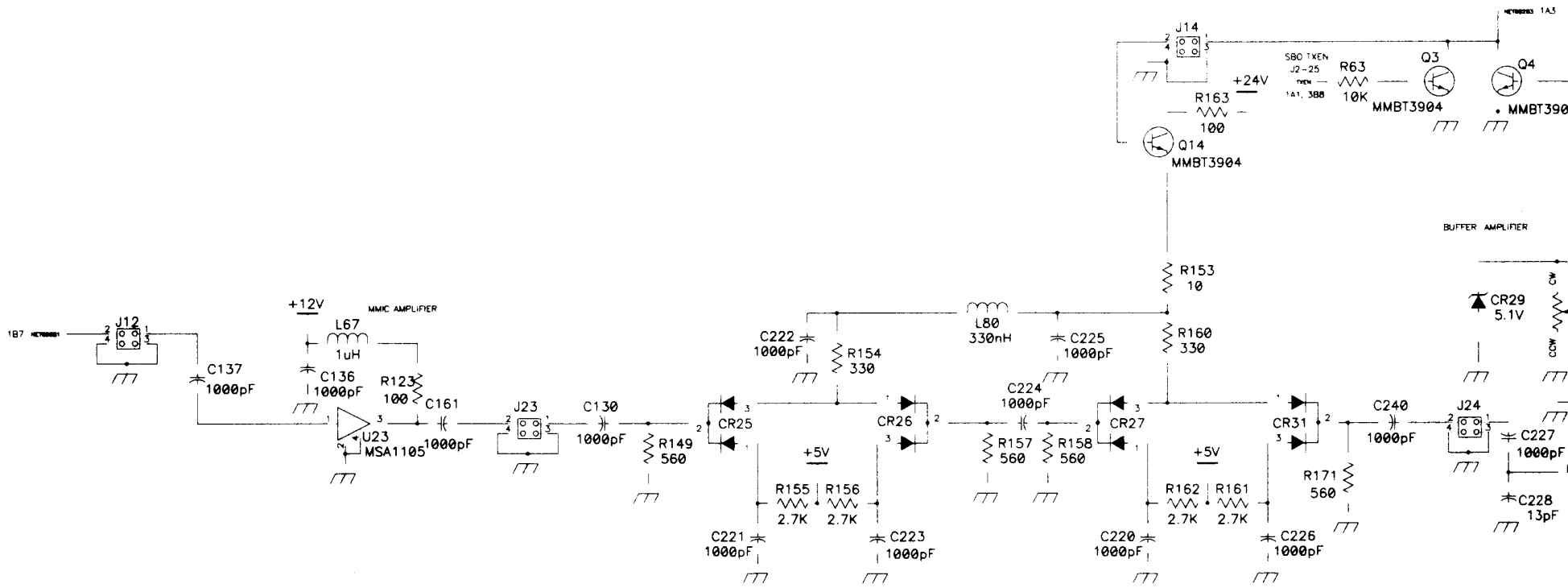

Tue Jun 30 1998
08:55:05

DWG NO. 012030-9001 SH 5 REV B

REVISIONS			
REV	DESCRIPTION	DATE	APPROVED
1	1st PROTOTYPE	4/2/98	DESMON
–	RELEASED PER ERN LC00787	6/22/98	ROTHWE
A	REVISED PER ECO 2100-190	6/30/98	ROTHWE
B	REVISED PER ECO 2100-194	6/30/98	ROTHWE

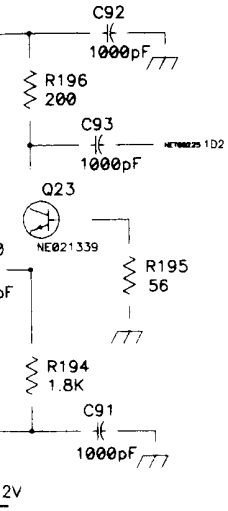

Sht 5 of 6

AIRPORT SYSTEMS INTERNATIONAL, INC.
11300 W. 89th St. OVERLAND PARK, KS

DRAWN D DESMOND	4/2/98	SIZE G	CAGE CODE 64415	DWG. NO. 012030-9001	REV B
CONTRACT NO		SCALE NONE	SCHEMATIC DIAGRAM	SHEET 5 OF 6	

THIS DOCUMENT CONTAINS PROPRIETARY INFORMATION AND SUCH INFORMATION MAY NOT BE DISCLOSED TO OTHERS FOR ANY PURPOSE NOR FOR MANUFACTURING PURPOSES WITHOUT WRITTEN PERMISSION FROM AIRPORT SYSTEMS INTERNATIONAL, INC.

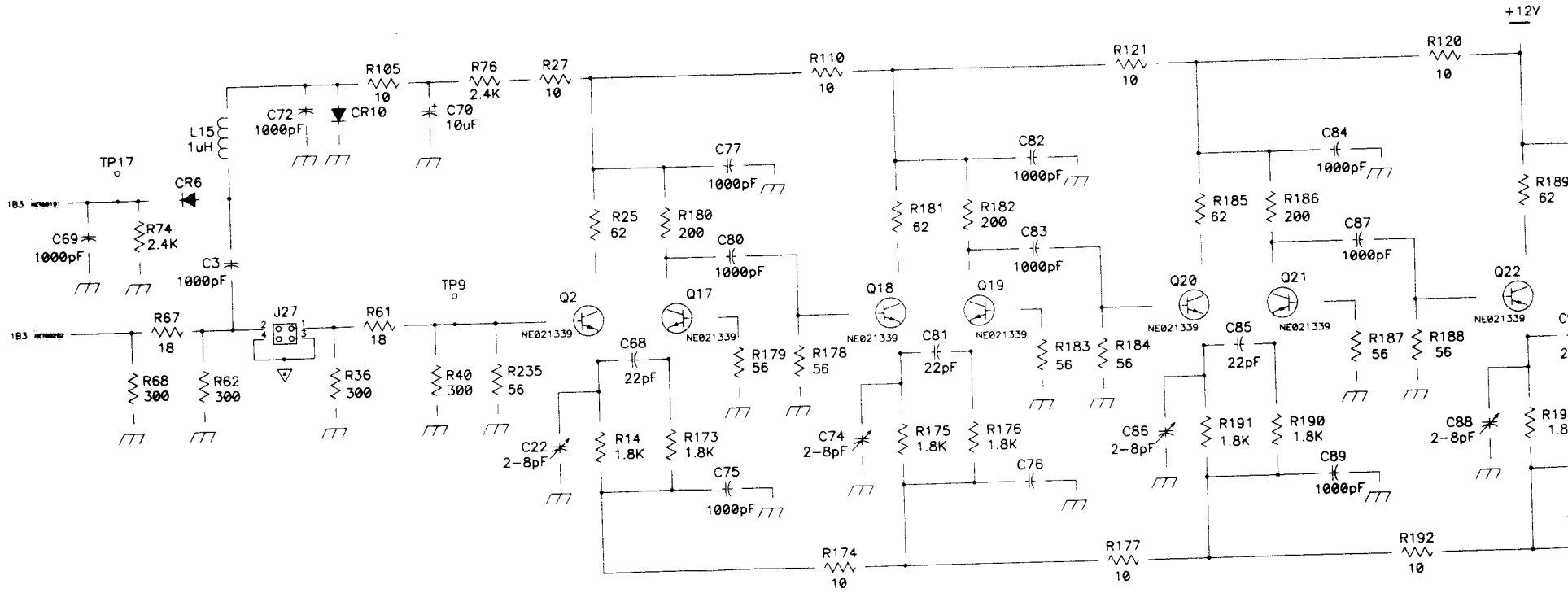

REVISIONS			
REV	DESCRIPTION	DATE	APPROVED
1	1st PROTOTYPE	4/2/98	DESMO
–	RELEASED PER ERN LC00787	6/22/98	ROTHW
A	REVISED PER ECO 2100-190	6/30/98	ROTHW
B	REVISED PER ECO 2100-194	6/30/98	ROTHW

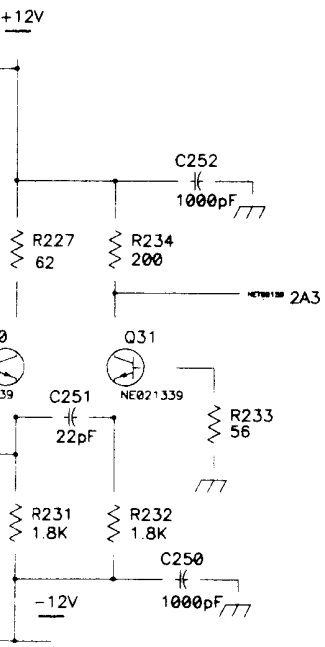

AIRPORT SYSTEMS INTERNATIONAL, INC.
11300 W. 89th St.• OVERLAND PARK, KS

DRAWN D DESMOND	4/2/98	SIZE G	CAGE CODE 64415
CONTRACT NO.		SCALE NONE	SCHEMATIC DIAGRAM

DWG. NO. 012030-9001 REV B

SHEET 6 OF 6
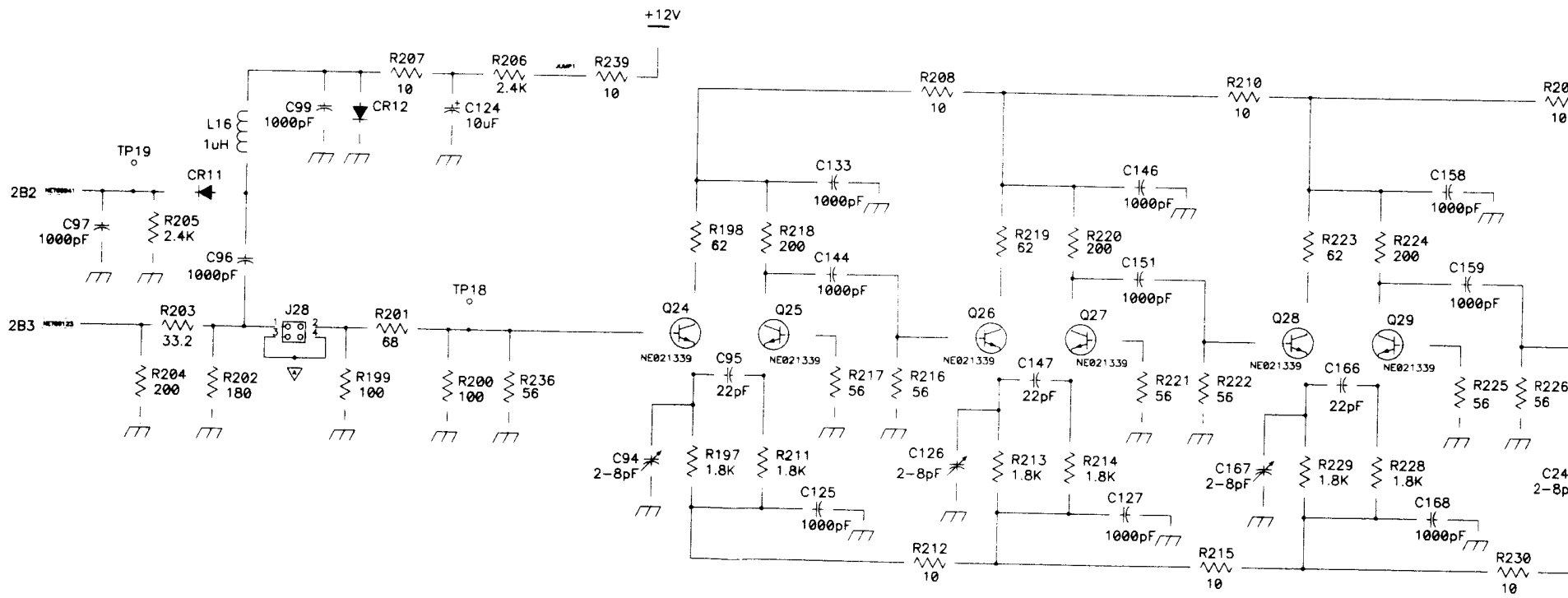
THIS DOCUMENT CONTAINS PROPRIETARY INFORMATION AND SUCH INFORMATION MAY NOT BE DISCLOSED TO OTHERS FOR ANY PURPOSE NOR FOR MANUFACTURING PURPOSES WITHOUT WRITTEN PERMISSION FROM AIRPORT SYSTEMS INTERNATIONAL, INC.