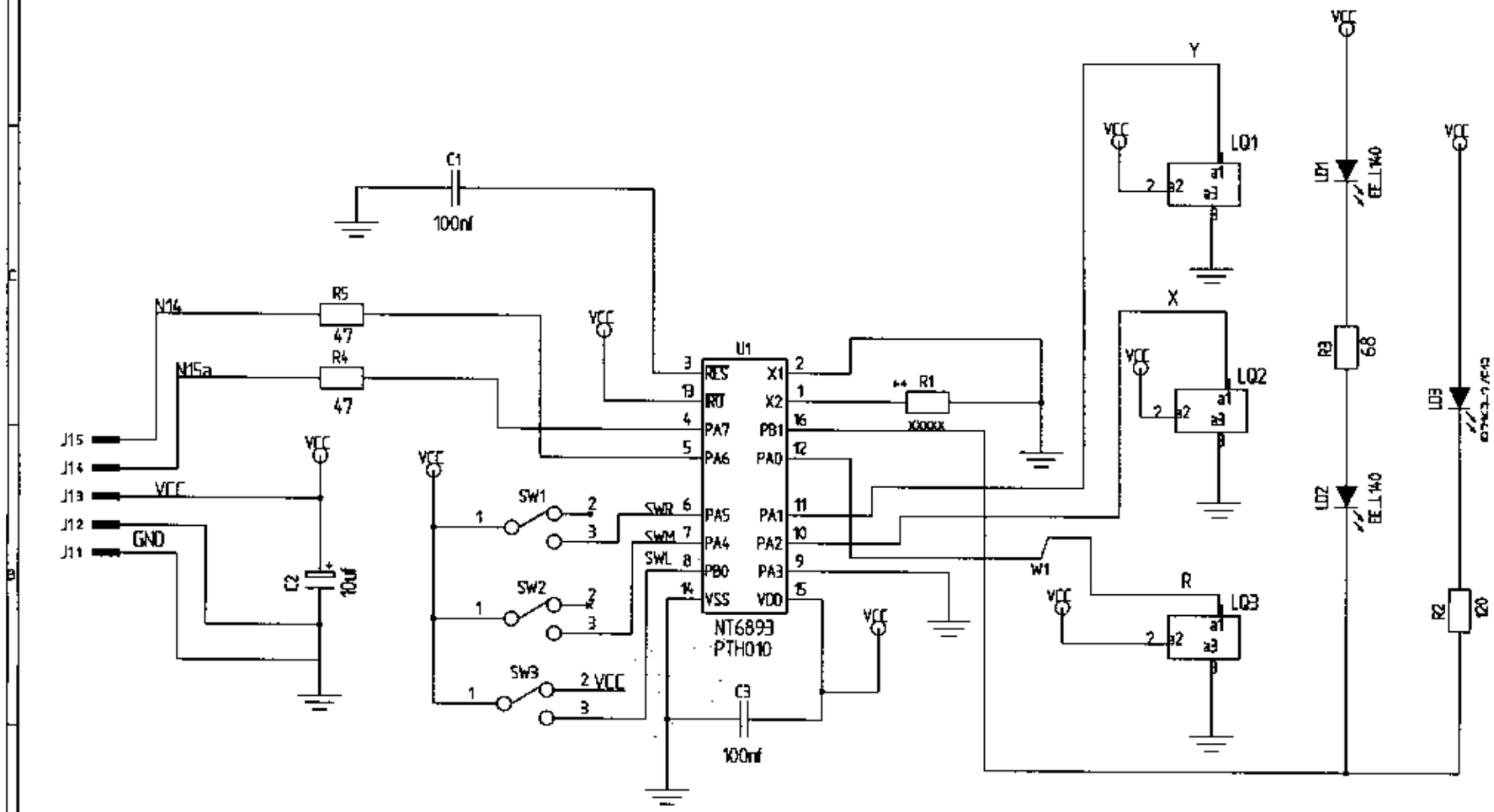

R1 Value	U1
39.2K 1%	NT6893
124K 1%	PTH 010

Logitech DATE : 9/2(

TITLE	Quitochan,M-S69,AW		
DOC. ID	SCH-221443-0000,PA2	DRAW	Joanne Wi
ENG. AP.	Maxime Marini	CHECK	Allan Lee
DSK FILE	443pa2		SHEET 1