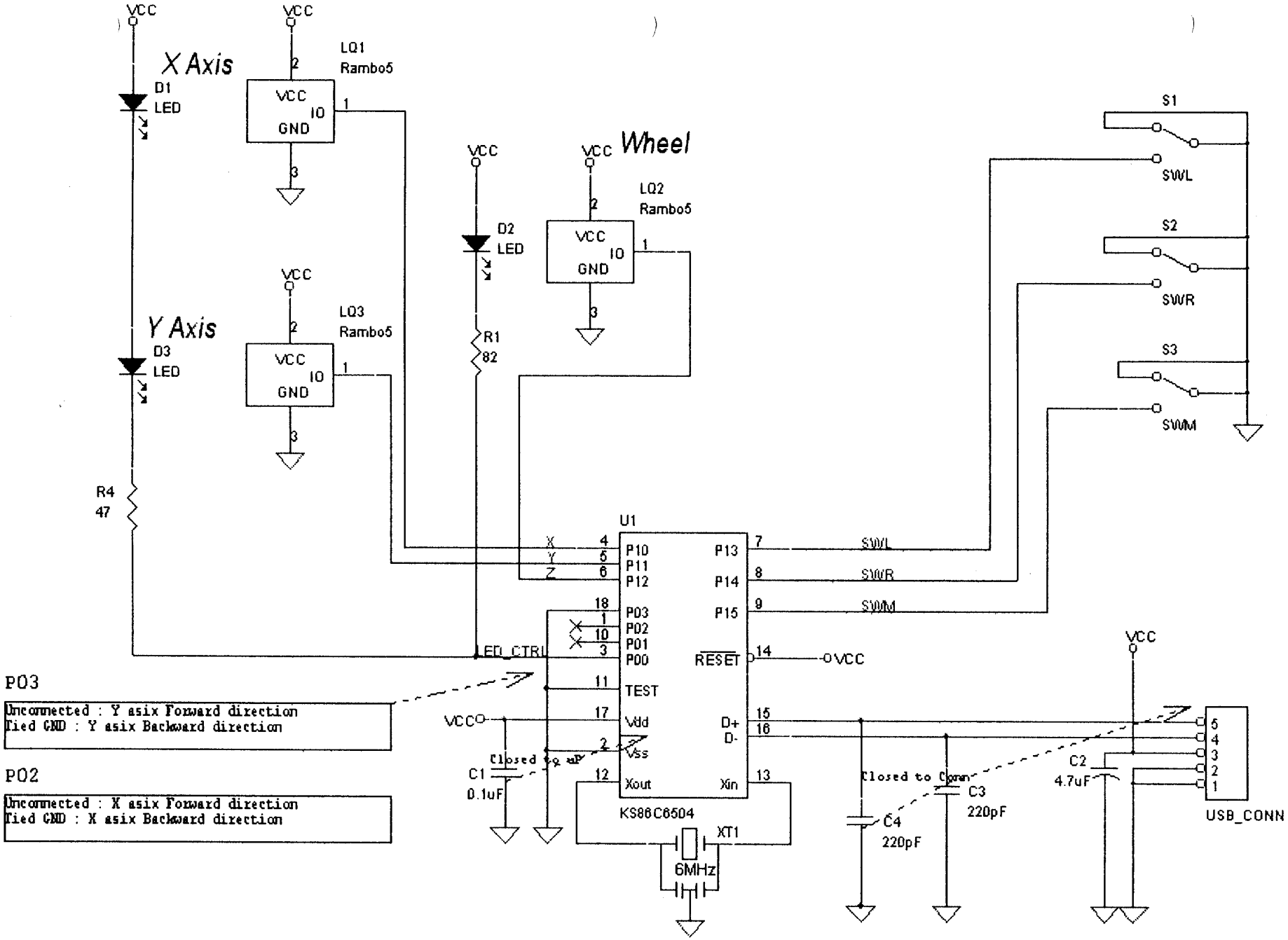
X Axis
Y Axis
Wheel
VCC
D1
LED
D2
LED
D3
LED
LQ1
Rambo5
LQ2
Rambo5
LQ3
Rambo5
VCC
IO
GND
R1
82
R4
47
S1
S2
S3
SWL
SWR
SWM
U1
P10
P11
P12
P03
P02
P01
P00
TEST
Vdd
Vss
Xout
Xin
P13
P14
P15
RESET
D+
D-
LED_CTRL
KS86C6504
XT1
6MHz
C1
0.1uF
C2
4.7uF
C3
220pF
C4
220pF
USB_CONN
P03
Unconnected : Y asix Forward direction
Tied GND : Y asix Backward direction
P02
Unconnected : X asix Forward direction
Tied GND : X asix Backward direction