Car Alarm Transmitter TX-427

Schematic Diagram

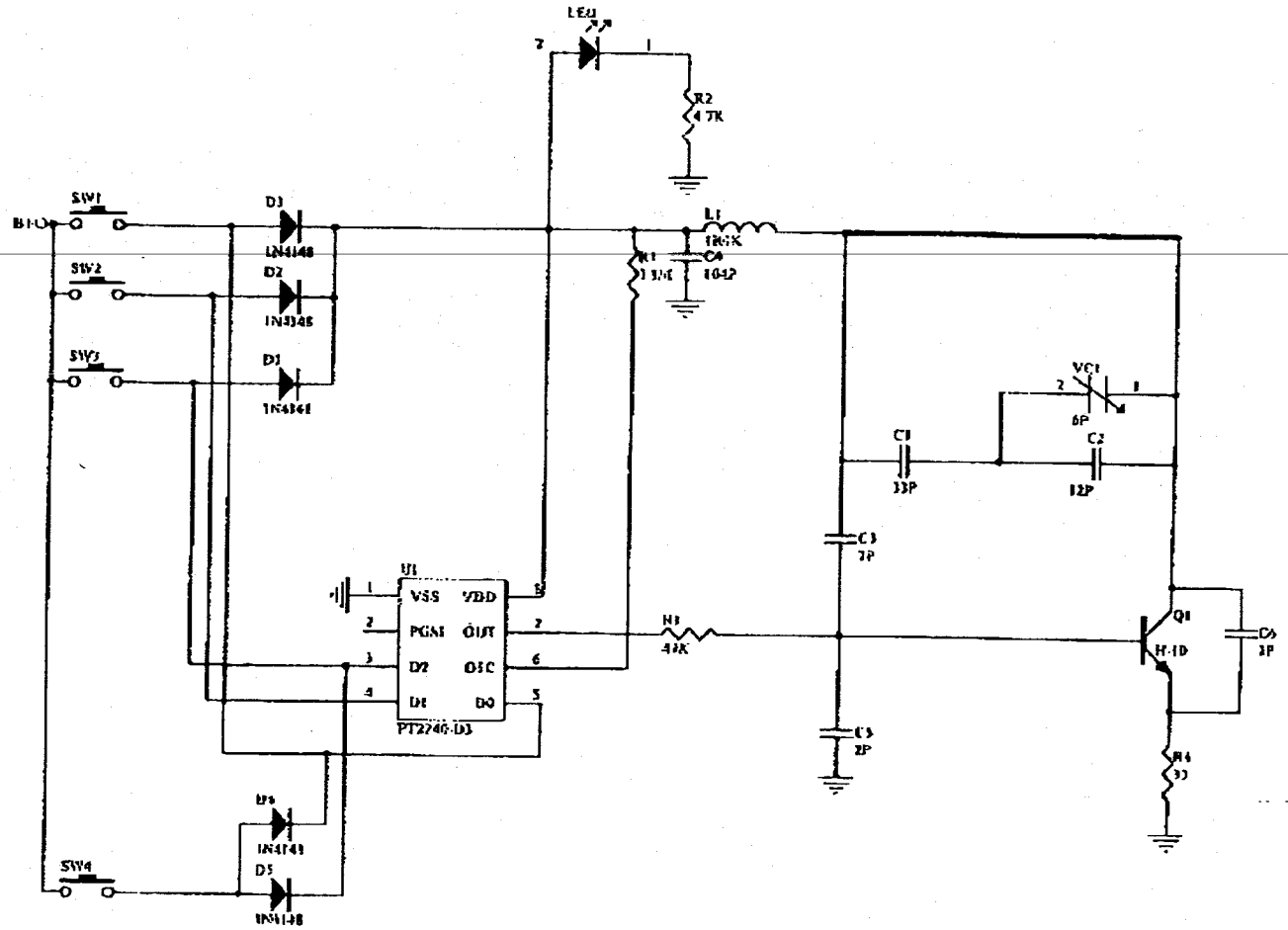

Huge Technology Co., LTD.

6F-8, No. 20, Lane 609, Chung-Hsin Rd., Sec.5, San-Chung City, Taipei, Taiwan