Notice of Proprietary Information:
The information contained herin is the property of COM DEV Wireless Systems and shall not be copied or reproduced, in whole or in part, nor shall its contents be revealed or distributed without prior written permission from COM DEV Wireless Systems.

REVISIONS

REV.	ECO NO.	DESCRIPTION	DATE	APPROVED
E01		DEVELOPMENTAL		
NC		INITIAL RELEASE		
A	01001	ADDED CR6		

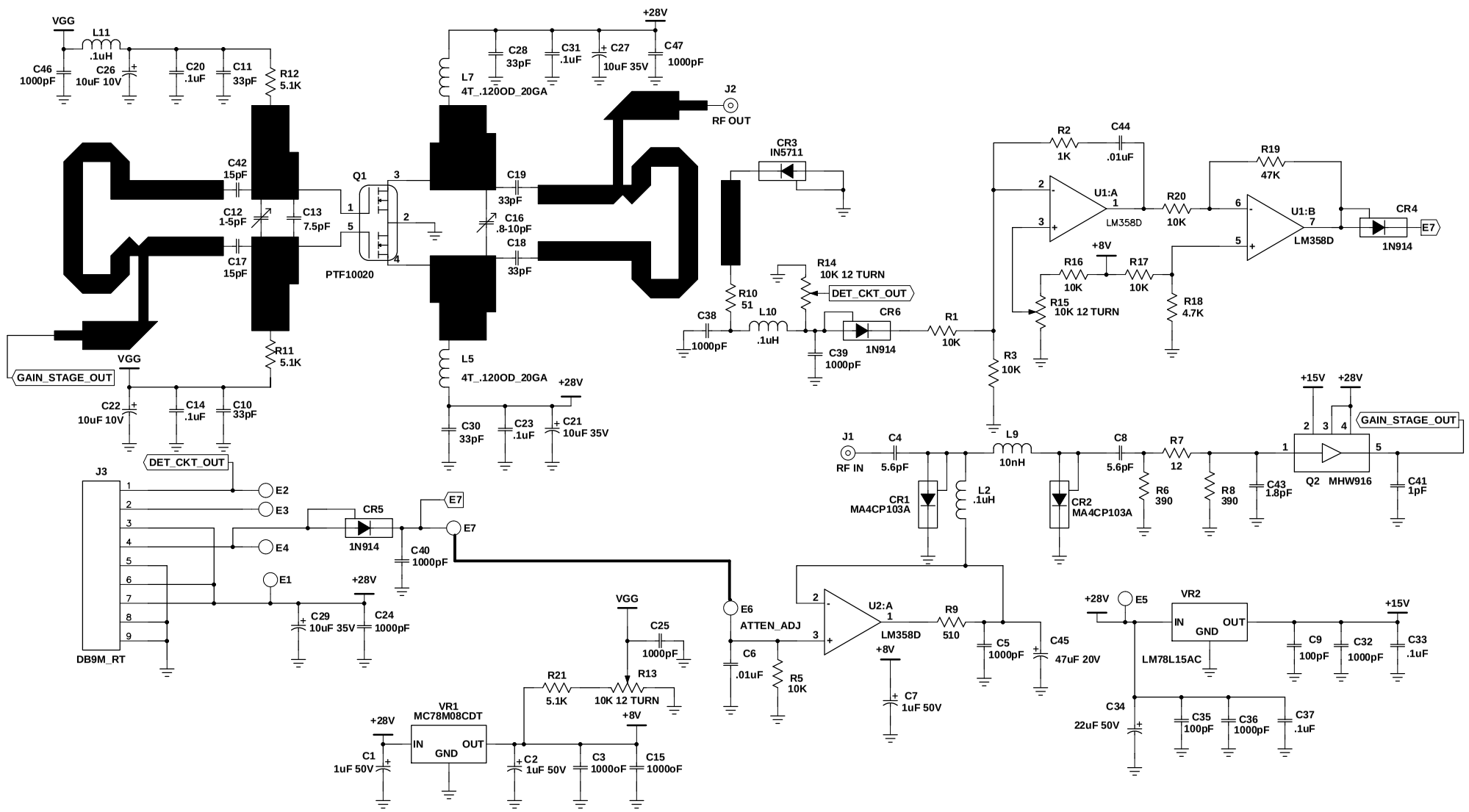

{Power Table}

{Spare Gate Table}

1. ALL RESITOR VALUES ARE IN OHMS.

NOTES: (UNLESS OTHERWISE SPECIFIED)

700-01227-000	900-01021-110
NEXT ASSY	USED ON
APPLICATION	

UNLESS OTHERWISE SPECIFIED DIMENSIONS ARE IN INCHES AND TOLERANCE VALUES ARE:
FRACTIONS +/- 1/32 DECIMALS .XX +/- .03 .XXX +/- .010 ANGLES +/- 1

MATERIAL: N/A

FINISH: N/A

DO NOT SCALE DRAWING

CONTRACT NO.:

APPROVALS		DATE
DRW.	Ed Askew	10/1/98
CHK.		
ENG.		
Q.A.		
MFG.		
APPR.		

COM DEV
WIRELESS SYSTEMS
975 FLYNN RD.
CAMARILLO, CA 93012

SCHEMATIC
120 WATT AMP

SIZE	FSCM NO.	DWG. NO.	REV.
C	31791	110-01227-000	A

SCALE: SHEET 1 OF 1