NUMBER 117261

PARTS LIST

ITEM	PART NO.	QTY	UNIT

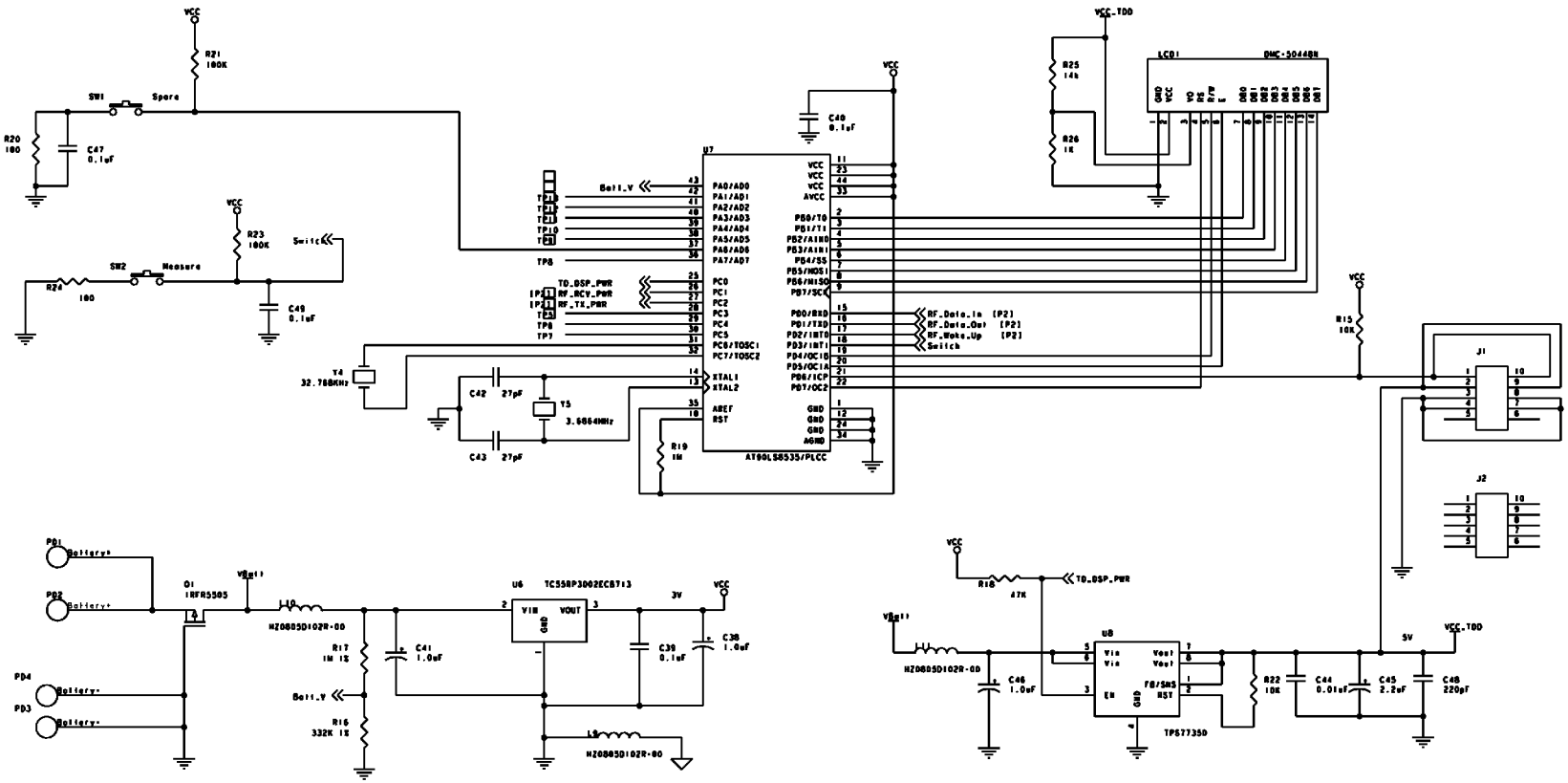

INCH - ASME Y14.5M

PRO/E-DWG-3D

LTR	DESCRIPTION	ECO	DATE
B	REVISED PER ECO	Z009360	11/02/02
A	RELEASED 278M	----	5/04/02

REVISIONS

UNLESS OTHERWISE NOTED:
DIMENSIONS ARE IN INCHES
SILICONE-FREE STD 4.1208
DIM & TOL STD 1.8402 & ASME Y14.5M - 1994
TOLERANCES: SEE GRACO STANDARDS
CENTERLINE VARIANCE STD 1.0406
HOLES STD 1.0401
SHEET METAL STD 4.0100
PLATED & NT TB PARTS STD 1.0409
BURR & EDGES STD 1.0420
THREADS STD 1.0425
SURFACE ROUGHNESS STD 1.0445

DECIMALS			ANGLES
.?	.??	.???	
±.03	±.01	±.005	±1/2°

MATERIAL

SPEC. NO.

FINISH

SPEC NO

SCALE 1/1

DFTG TECH 5/04/02

MIKE MARSHIK

CHECKER

ENGINEER MIKE MARSHIK

GRACO

CONFIDENTIAL
THIS DRAWING SHALL BE USED ONLY AS SPECIFIED BY GRACO. ANY OTHER USE, REPRODUCTION OR DISCLOSURE TO OTHERS WITHOUT WRITTEN PERMISSION IS PROHIBITED.

TITLE
BOARD, CIRCUIT, CONTROL/RF TANK MONITOR

SIZE	SHEET	NUMBER	SERIES
C	2 OF 5	117261	