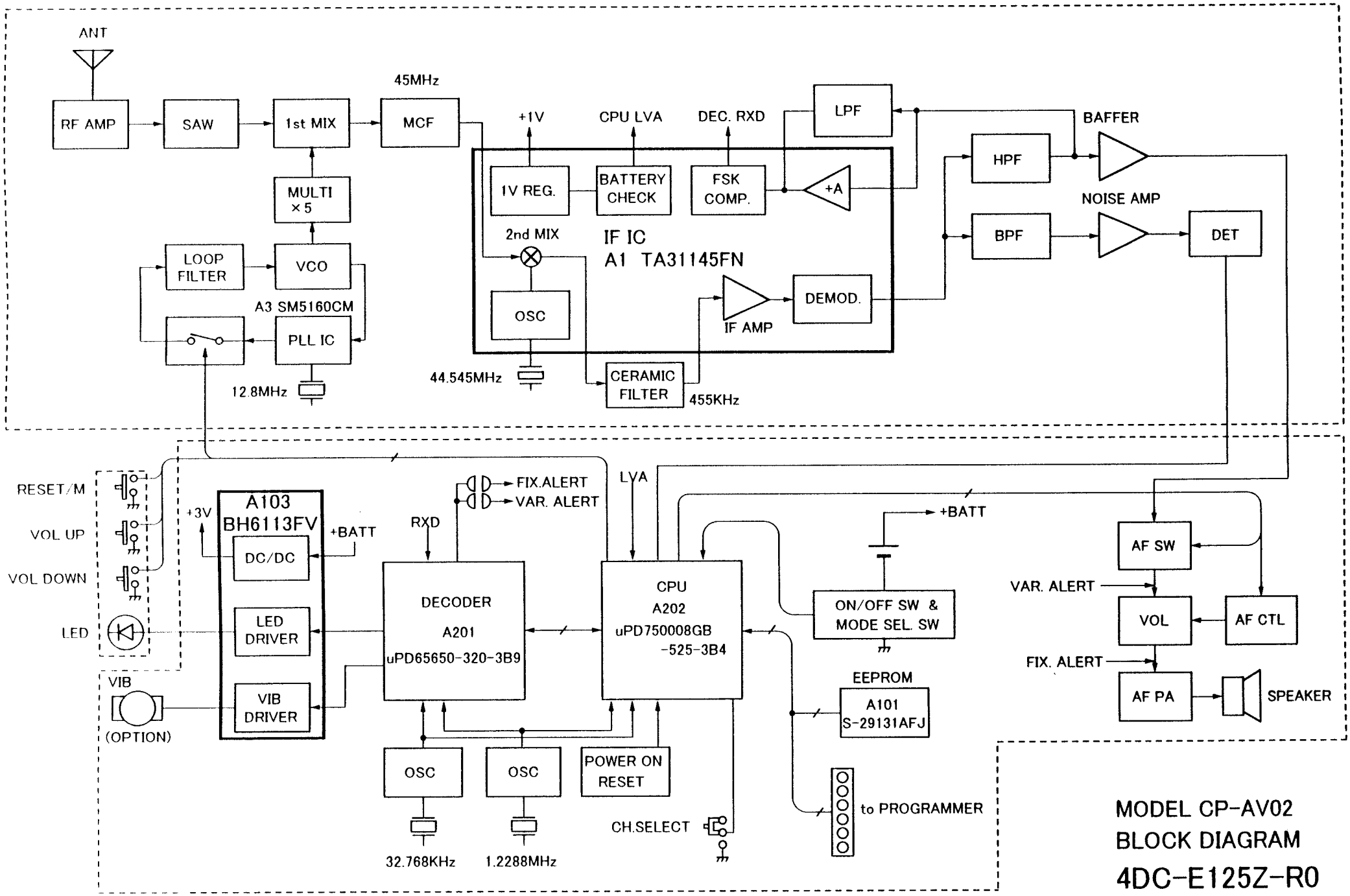

MODEL CP-AV02
BLOCK DIAGRAM
4DC-E125Z-R0