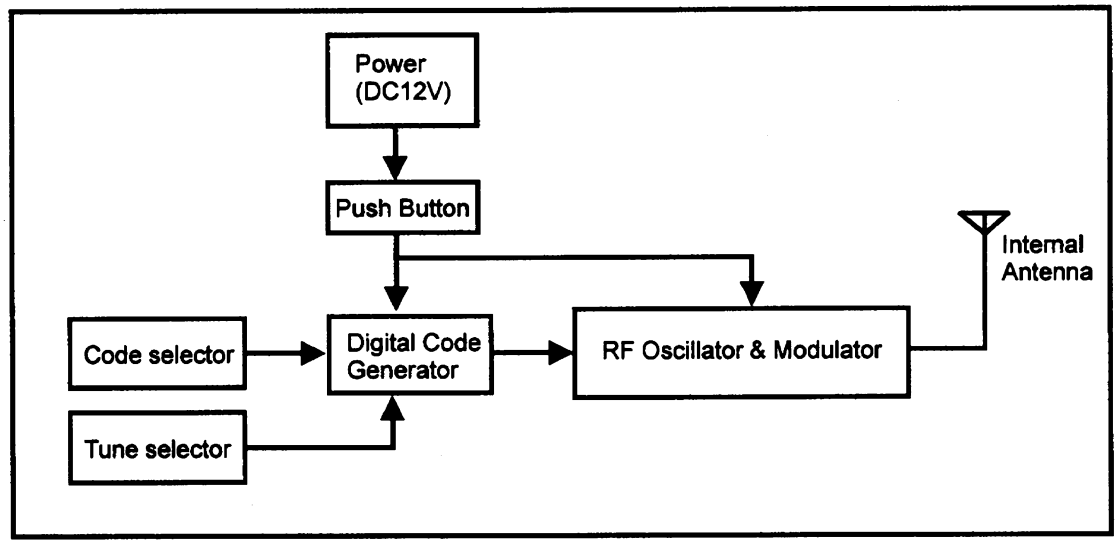Transmitter