REVISION STATUS			
REV:	DESCRIPTION:	DATE:	APP'D:
~	INITIAL RELEASE ERN715		

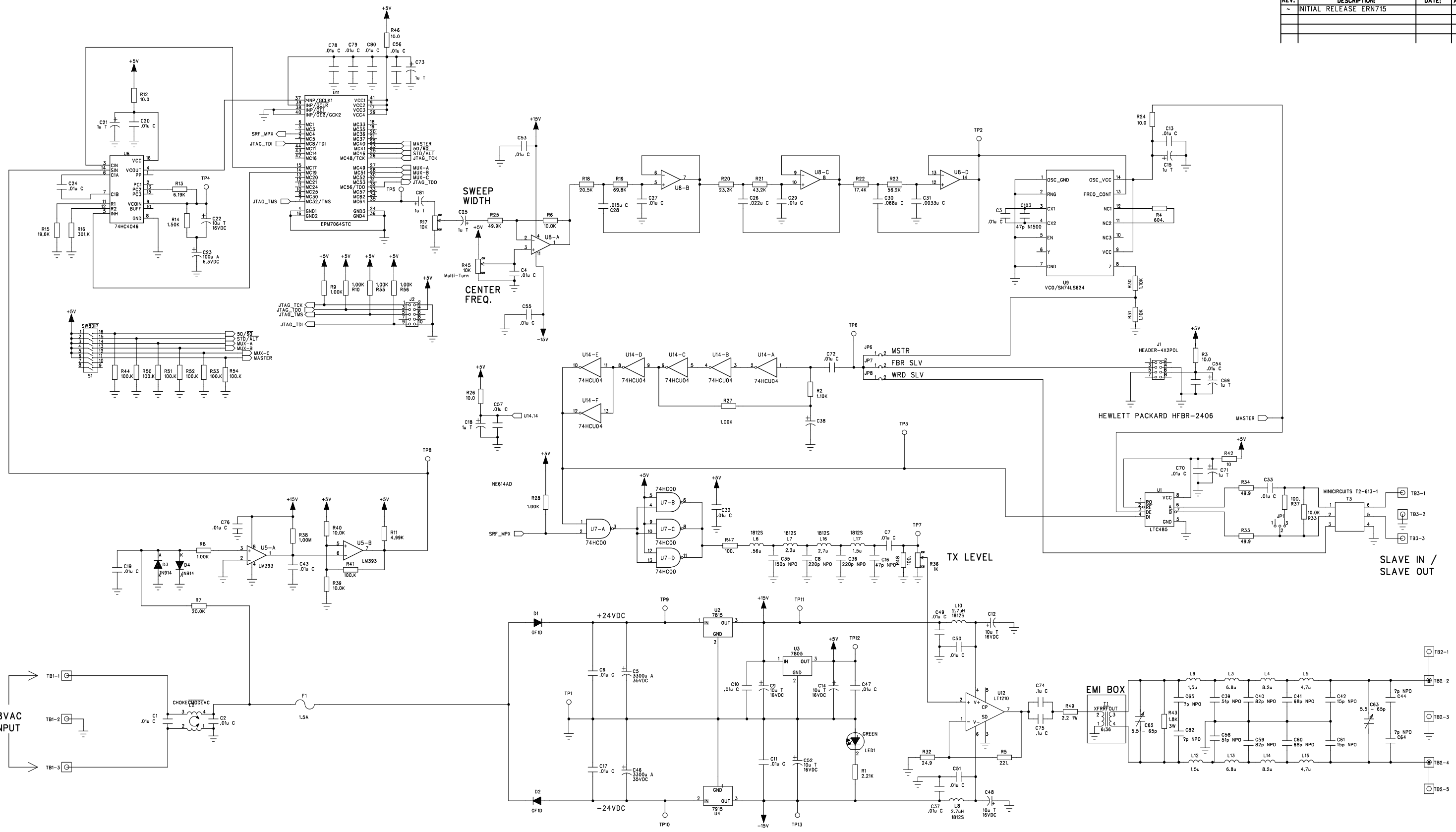

Notice: This document discloses information proprietary to SENTRY Technology Corp. and no intent to abandon such proprietary information or to grant any rights to the recipient, is to be inferred from any transfer of this document, all transfers of this document, except where express written consent has been granted, are made subject to the conditions that the document not be reproduced, copied, or otherwise represented either in whole or in part, and that no part of its contents or any embodiment thereof will be divulged or used in connection with any matters other than for SENTRY Technology Corporation.

SENTRY TECHNOLOGY CORP. 350 WIRELESS BLVD. HAUPPAUGE, NY 11788	DRAWN BY:	
	APRV'D BY:	
TITLE: TX 2000 SCHEMATIC		
DATE: 09/10/99	DRAWING NO: D 0940-02	REV. NO ~
ASSEMBLY NO: 3300-0940-01	SHEET: 1 OF 1	