DWG	ID NO.
216-1106	ID0301496

RELEASE DATA		DRAWN BY:	STDS CK:	TECH REV:
VER	DATE			
1	10/10/2012	SBC	BJS	SBC

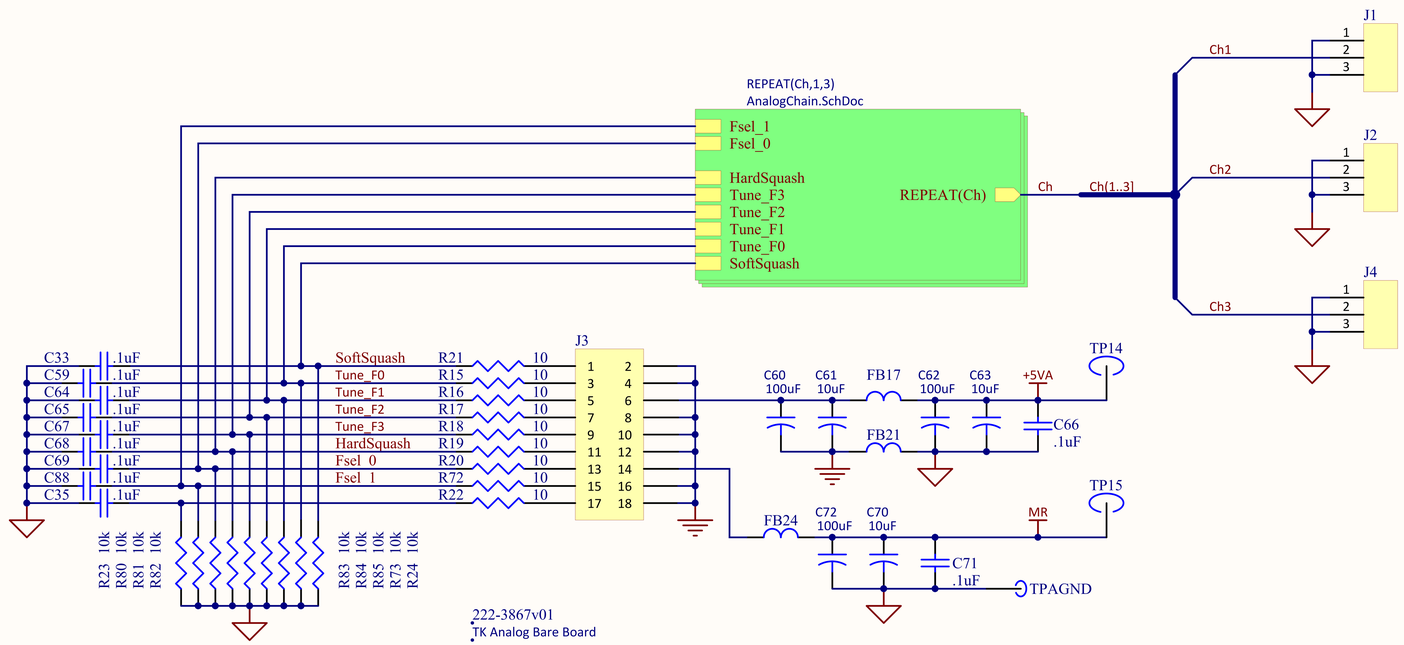

Ditch Witch ® Subsite ®

Title	TK Analog Board - Quad Frequency
DWG: 216-1106	Version 1
Date: 10/11/2012	Sheet 1 of 1
File Name: Master.SchDoc	Drawn by: Bucky Cole

DWG	ID NO.
216-1106	ID0301496

RELEASE DATA		DRAWN BY:	STDS CK:	TECH REV:
VER	DATE			

Note : This schematic is used in multiple channels in the assembly. To differentiate components between channels the desginator will be followed by an "A", "B", or "C". For example, for Channel A, "D2" shown on this schematic will appear on the PCB as "D2A".

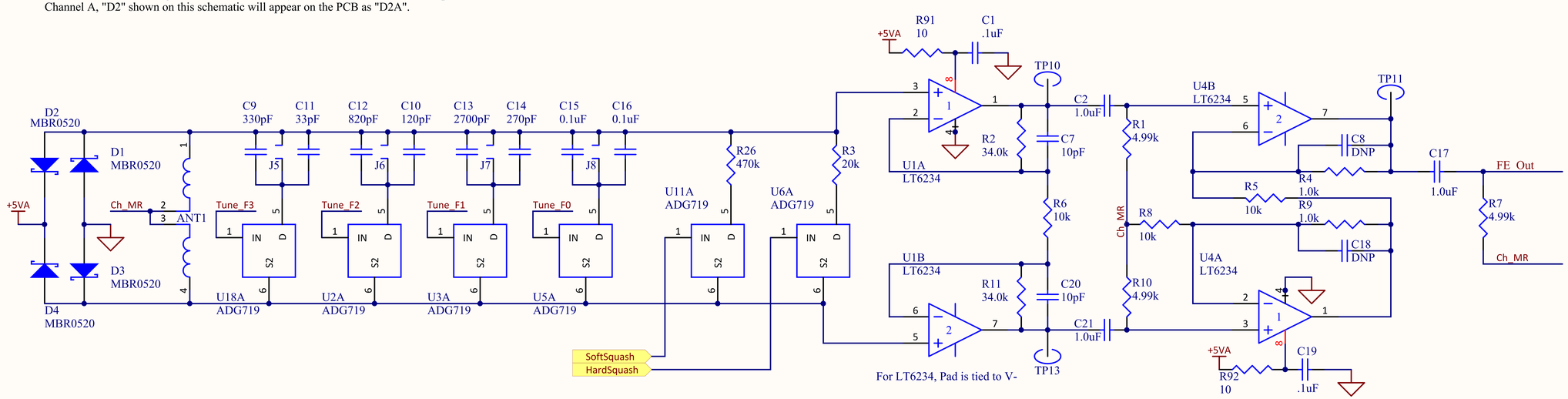

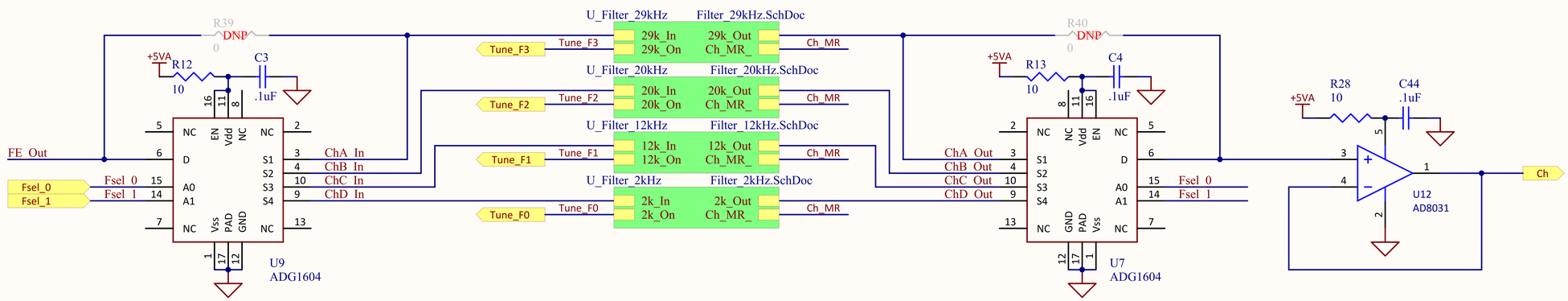

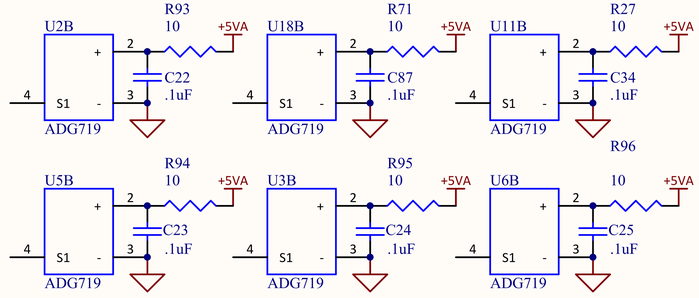

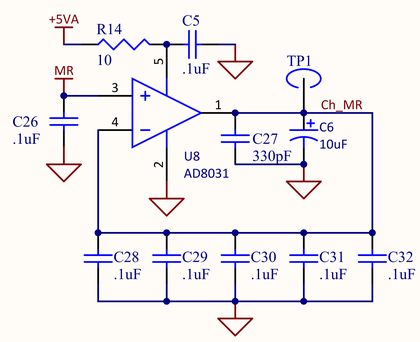

Ditch Witch ® Subsite ®

Title	TK Analog Board - Quad Frequency
DWG: 216-1106	Version 1
Date: 10/11/2012	Sheet 1 of 1
File Name: AnalogChain.SchDoc	Drawn by: Bucky Cole

DWG	ID NO.
216-1106	ID0301496

RELEASE DATA		DRAWN BY:	STDS CK:	TECH REV:
VER	DATE			

Note : This schematic is used in multiple channels in the assembly. To differentiate components between channels the desginator will be followed by an "A", "B", or "C".

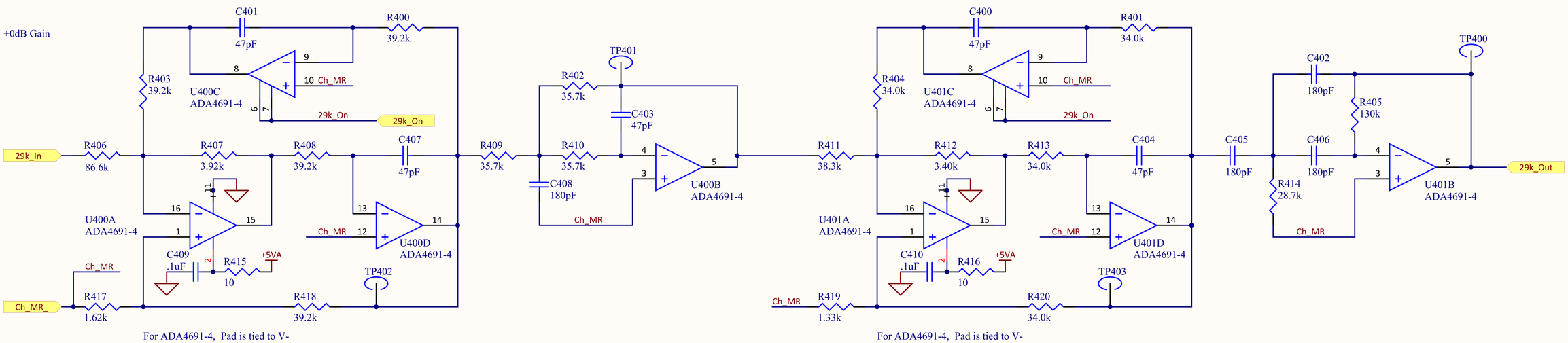

Ditch Witch ® Subsite ®

Title: TK Analog Board - Quad Frequency	
DWG: 216-1106	Version: 1
Date: 10/11/2012	Sheet 1 of 1
File Name: Filter_29kHz.SchDoc	Drawn by: Bucky Cole

DWG	ID NO.
216-1106	ID0301496

RELEASE DATA		DRAWN BY:	STDS CK:	TECH REV:
VER	DATE			

Note : This schematic is used in multiple channels in the assembly. To differentiate components between channels the desginator will be followed by an "A", "B", or "C".

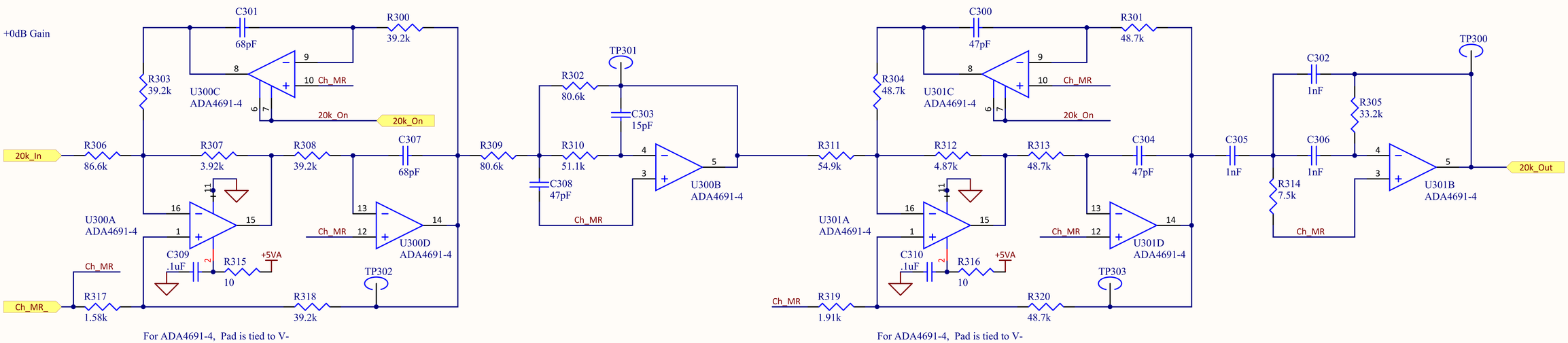

Ditch Witch ® Subsite ®

Title: TK Analog Board - Quad Frequency	
DWG: 216-1106	Version: 1
Date: 10/11/2012	Sheet 1 of 1
File Name: Filter_20kHz.SchDoc	Drawn by: Bucky Cole

DWG	ID NO.
216-1106	ID0301496

RELEASE DATA		DRAWN BY:	STDS CK:	TECH REV:
VER	DATE			

Note : This schematic is used in multiple channels in the assembly. To differentiate components between channels the desginator will be followed by an "A", "B", or "C".

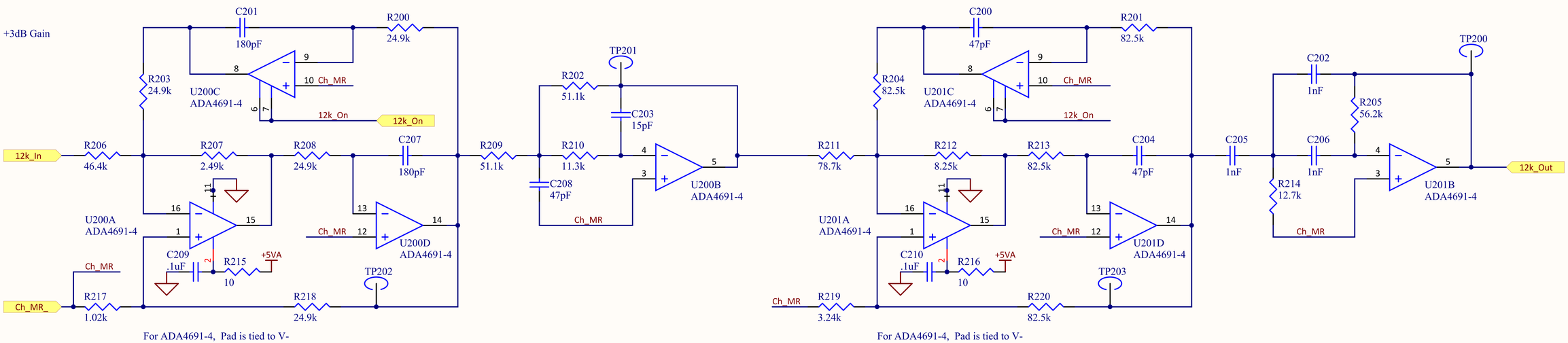

Ditch Witch ® Subsite ®

Title: TK Analog Board - Quad Frequency	
DWG: 216-1106	Version: 1
Date: 10/11/2012	Sheet 1 of 1
File Name: Filter_12kHz.SchDoc	Drawn by: Bucky Cole

DWG	ID NO.
216-1106	ID0301496

RELEASE DATA		DRAWN BY:	STDS CK:	TECH REV:
VER	DATE			

Note : This schematic is used in multiple channels in the assembly. To differentiate components between channels the desginator will be followed by an "A", "B", or "C".

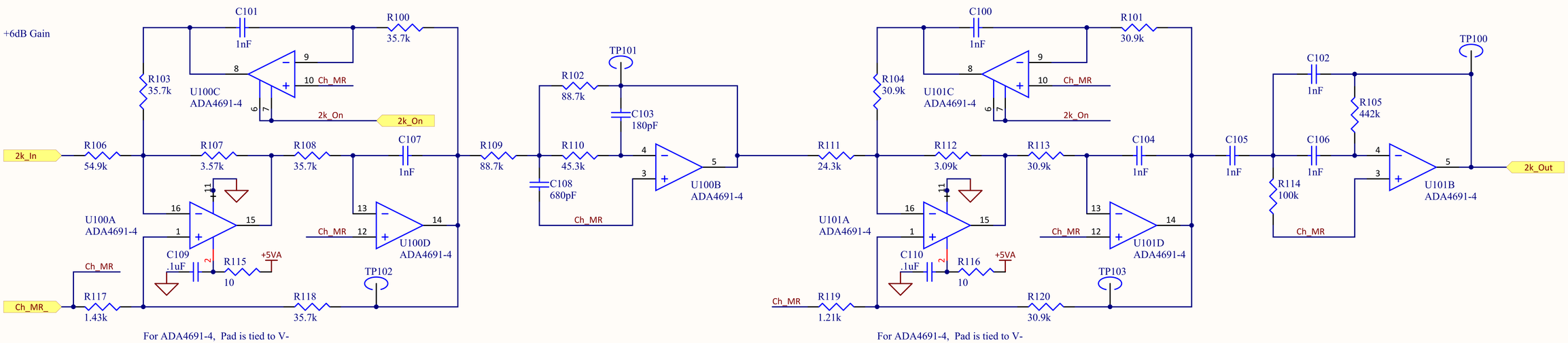

Ditch Witch ® Subsite ®

Title: TK Analog Board - Quad Frequency	
DWG: 216-1106	Version: 1
Date: 10/11/2012	Sheet 1 of 1
File Name: Filter_2kHz.SchDoc	Drawn by: Bucky Cole

TK Analog Board - Quad Frequency

DWG:	ID NO:	VER:
216-1106	ID0301496	1

Item	CMW P/N	Quantity	Designator	Type	Value	Comment	Description	Package	Manufacturer	Manufacturer P/N
1	222-3867v01	1		Bare Board		TK Analog Bare Board	TK Analog Bare Board			
2	222-3870	21	C103A, C103B, C103C, C201A, C201B, C201C, C207A, C207B, C207C, C402A, C402B, C402C, C405A, C405B, C405C, C406A, C406B, C406C, C408A, C408B, C408C	Capacitor	0.00018	180pF	CAP CER 180PF 50V NP0 0603	0603	AVX Corporation	06035A181FAT2A
3	222-3871	3	C108A, C108B, C108C	Capacitor	0.00068	680pF	CAP CER 680PF 50V 1% NP0 0603	0603	AVX Corporation	06035A681FAT2A
4	222-3942	3	C10A, C10B, C10C	Capacitor	.000120	120pF	CAP CER 120PF 50V NPO 1% 0805	0805	Murata	GRM2165C1H121FA01D
5	222-3947	3	C9A, C9B, C9C	Capacitor	0.00033	330pF	CAP CER 330PF 50V 1% NP0 0805	0805	AVX Corporation	08055A331FAT2A
6	222-3948	3	C12A, C12B, C12C	Capacitor	.000820	820pF	CAP CER 820PF 50V 1% NPO 0805	0805	AVX	08055A821FAT2A
7	222-3949	3	C13A, C13B, C13C	Capacitor	2700pf	2700pF	CAP CER 2700PF 50V 1% NP0 0805	0805	AVX	08055A272FAT2A
8	222-3872	33	C200A, C200B, C200C, C204A, C204B, C204C, C208A, C208B, C208C, C300A, C300B, C300C, C304A, C304B, C304C, C308A, C308B, C308C, C400A, C400B, C400C, C401A, C401B, C401C, C403A, C403B, C403C, C404A, C404B, C404C, C407A, C407B, C407C	Capacitor	0.000047	47pF	CAP CERM 47PF 1% 100V NP0 0603	0603	AVX Corporation	06031A470FAT2A
9	222-3873	39	C100A, C100B, C100C, C101A, C101B, C101C, C102A, C102B, C102C, C104A, C104B, C104C, C105A, C105B, C105C, C106A, C106B, C106C, C107A, C107B, C107C, C202A, C202B, C202C, C205A, C205B, C205C, C206A, C206B, C206C, C302A, C302B, C302C, C305A, C305B, C305C, C306A, C306B, C306C	Capacitor	0.001	1nF	CAP CER 1000PF 50V C0G 1% 0603	0603	TDK Corporation	C1608C0G1H102F
10	222-1002	6	C6A, C6B, C6C, C61, C63, C70	Capacitor	10	10uF	CAP TANTALUM 10UF 16V 10% SMD	3216	AVX Corporation	TAJA106K016RNJ
11	222-3723	6	C7A, C7B, C7C, C20A, C20B, C20C	Capacitor	0.00001	10pF	CAP CER 10PF 50V 5% NP0 0402	0402	Murata Electronics North America	GRM1555C1H100JZ01D
12	222-3874	6	C203A, C203B, C203C, C303A, C303B, C303C	Capacitor	0.000015	15pF	CAP CER 15PF 100V NP0 0603	0603	AVX Corporation	06031A150FAT2A
13	222-3875	6	C301A, C301B, C301C, C307A, C307B, C307C	Capacitor	0.000068	68pF	CAP CER 68PF 100V NP0 0603	0603	AVX Corporation	06031A680FAT2A
14	222-3950	6	C15A, C15B, C15C, C16A, C16B, C16C	Capacitor	0.1	0.1uF	CAP CER 0.1UF 50V 5% X7R 0805	0805	Kemet	C0805C104J5RACTU
15	222-3876	9	C2A, C2B, C2C, C17A, C17B, C17C, C21A, C21B, C21C	Capacitor	1	1.0uF	CAP CER 1.0UF 50V X5R 10% 0603	0603	Taiyo Yuden	UMK107BJ105KA-T
16	222-1507	3	C27A, C27B, C27C	Capacitor, Ceramic	0.00033	330pF	CAP CER 330PF 50V 10% X7R 0603	0603	Yageo	CC0603KRX7R9BB331
17	222-2405	89	C1A, C1B, C1C, C3A, C3B, C3C, C4A, C4B, C4C, C5A, C5B, C5C, C19A, C19B, C19C, C22A, C22B, C22C, C23A, C23B, C23C, C24A, C24B, C24C, C25A, C25B, C25C, C26A, C26B, C26C, C28A, C28B, C28C, C29A, C29B, C29C, C30A, C30B, C30C, C31A, C31B, C31C, C32A, C32B, C32C, C33, C34A, C34B, C34C, C35, C44A, C44B, C44C, C59, C64, C65, C66, C67, C68, C69, C71, C87A, C87B, C87C, C88, C109A, C109B, C109C, C110A, C110B, C110C, C209A, C209B, C209C, C210A, C210B, C210C, C309A, C309B, C309C, C310A, C310B, C310C, C409A, C409B, C409C, C410A, C410B, C410C	Capacitor, Ceramic	0.1	.1uF	CAP CER 0.1UF 16V 10% X7R 0402	0402	Kemet	C0402C104K4RACTU
18	222-2403	3	C60, C62, C72	Capacitor, Tantalum	100	100uF	CAP TANT 100UF 10V 20% 1210	3528	AVX	TPSB107M010R0400
19	222-3937	3	C11A, C11B, C11C	Capacitors	33pF	33pF	CAP CER 33pF 50V 1% NP0 0805	0805	Murata	GRM2165C1H330FZ01D
20	222-3946	3	C14A, C14B, C14C	Capacitors	270pF	270pF	CAP CER 270PF 100V 1% NP0 0805	0805	Kemet	C0805C271F1GACTU
21	222-4133	1	J3	Connector, 2x9		CON 2x9	18 pos, 0.050" pitch socket strip	0.050" Pitch, Socket Strip	Samtec	FLE-109-01-G-DV
22	222-1522	12	D1A, D1B, D1C, D2A, D2B, D2C, D3A, D3B, D3C, D4A, D4B, D4C	Diode, Schottky	MBR0520	MBR0520	DIODE SCHOTTKY 0.5A 20V SOD-123	SOD-123	Fairchild Semiconductor	MBR0520L
23	221-893	3	FB17, FB21, FB24	Ferrite Bead		600 ohm	500mA, 600 ohm	1206	Laird-Signal Integrity Products	HZ1206E601R-10
24	222-3879	18	U2A, U2B, U2C, U3A, U3B, U3C, U5A, U5B, U5C, U6A, U6B, U6C, U11A, U11B, U11C, U18A, U18B, U18C	IC	ADG719	ADG719	IC SWITCH SPDT SOT23-6	SOT-23-6	Analog Devices Inc	ADG719BRTZ-REEL7
25	222-3880	24	U100A, U100B, U100C, U101A, U101B, U101C, U200A, U200B, U200C, U201A, U201B, U201C, U300A, U300B, U300C, U301A, U301B, U301C, U400A, U400B, U400C, U401A, U401B, U401C	IC	ADA4691-4	ADA4691-4	IC OPAMP GP RR 3.6MHZ QD 16LFCSP	LFCSP-16_0_5mm	Analog Devices Inc	ADA4691-4ACPZ-R2
26	222-3881	6	U7A, U7B, U7C, U9A, U9B, U9C	IC	ADG1604	ADG1604	IC MULTIPLEXER 4X1 16LFCSP	LFCSP-16_0_65mm	Analog Devices Inc	ADG1604BCPZ-REEL7
27	222-3882	6	U1A, U1B, U1C, U4A, U4B, U4C	IC	LT6234	LT6234	IC OP AMP DUAL 60MHZ R-R 8-DFN	DFN-8	Linear Technology	LT6234IDD
28	222-460	6	U8A, U8B, U8C, U12A, U12B, U12C	IC, Op Amp	AD8031	AD8031	IC OPAMP VF R-R LP LDIST SOT23-5	SOT-23-5	Analog Devices Inc	AD8031ARTZ-REEL7
29	222-3877	3	J1, J2, J4	Receptacle, 1x3	1x3 Female Header	Female, CON 1x3	CONN RCPT 3POS SGL .1" Thru Hole	0.1" Centers, .2" Height	Samtec Inc	CES-103-01-T-S
30	222-2415	12	R201A, R201B, R201C, R204A, R204B, R204C, R213A, R213B, R213C, R220A, R220B, R220C	Resistor	82500	82.5k	RES 82.5K OHM 1/10W 1% 0402 SMD	0402	Panasonic - ECG	ERJ-2RKF8252X

TK Analog Board - Quad Frequency

DWG:	ID NO:	VER:
216-1106	ID0301496	1

Item	CMW P/N	Quantity	Designator	Type	Value	Comment	Description	Package	Manufacturer	Manufacturer P/N
31	222-3883	12	R200A, R200B, R200C, R203A, R203B, R203C, R208A, R208B, R208C, R218A, R218B, R218C	Resistor	24900	24.9k	RES 24.9K OHM 1/10W 1% 0402 SMD	0402	Panasonic - ECG	ERJ-2RKF2492X
32	222-3884	12	R101A, R101B, R101C, R104A, R104B, R104C, R113A, R113B, R113C, R120A, R120B, R120C	Resistor	30900	30.9k	RES 30.9K OHM 1/10W 1% 0402 SMD	0402	Panasonic - ECG	ERJ-2RKF3092X
33	222-3885	12	R301A, R301B, R301C, R304A, R304B, R304C, R313A, R313B, R313C, R320A, R320B, R320C	Resistor	48700	48.7k	RES 48.7K OHM 1/10W 1% 0402 SMD	0402	Panasonic - ECG	ERJ-2RKF4872X
34	222-2408	18	R5A, R5B, R5C, R6A, R6B, R6C, R8A, R8B, R8C, R23, R24, R73, R80, R81, R82, R83, R84, R85	Resistor	10000	10k	RES 10.0K OHM 1/16W 1% 0402 SMD	0402	Vishay	CRCW040210K0FKED
35	222-3886	18	R2A, R2B, R2C, R11A, R11B, R11C, R401A, R401B, R401C, R404A, R404B, R404C, R413A, R413B, R413C, R420A, R420B, R420C	Resistor	34000	34.0k	RES 34.0K OHM 1/10W 1% 0402 SMD	0402	Panasonic - ECG	ERJ-2RKF3402X
36	222-3887	21	R100A, R100B, R100C, R103A, R103B, R103C, R108A, R108B, R108C, R118A, R118B, R118C, R402A, R402B, R402C, R409A, R409B, R409C, R410A, R410B, R410C	Resistor	35700	35.7k	RES 35.7K OHM 1/10W 1% 0402 SMD	0402	Panasonic - ECG	ERJ-2RKF3572X
37	222-3888	24	R300A, R300B, R300C, R303A, R303B, R303C, R308A, R308B, R308C, R318A, R318B, R318C, R400A, R400B, R400C, R403A, R403B, R403C, R408A, R408B, R408C, R418A, R418B, R418C	Resistor	39200	39.2k	RES 39.2K OHM 1/10W 1% 0402 SMD	0402	Panasonic - ECG	ERJ-2RKF3922X
38	222-3711	3	R114A, R114B, R114C	Resistor	100000	100k	RES 100K OHM 1/10W 1% 0402 SMD	0402	Panasonic - ECG	ERJ-2RKF1003X
39	222-3780	3	R26A, R26B, R26C	Resistor	470000	470k	RES 470K OHM 1/10W 1% 0402 SMD	0402	Panasonic - ECG	ERJ-2RKF4703X
40	222-3783	3	R3A, R3B, R3C	Resistor	20000	20k	RES 20.0K OHM 1/10W 1% 0402 SMD	0402	Panasonic - ECG	ERJ-2RKF2002X
41	222-3889	3	R217A, R217B, R217C	Resistor	1020	1.02k	RES 1.02K OHM 1/10W 1% 0402 SMD	0402	Panasonic - ECG	ERJ-2RKF1021X
42	222-3890	3	R210A, R210B, R210C	Resistor	11300	11.3k	RES 11.3K OHM 1/10W 1% 0402 SMD	0402	Panasonic - ECG	ERJ-2RKF1132X
43	222-3891	3	R119A, R119B, R119C	Resistor	1210	1.21k	RES 1.21K OHM 1/10W 1% 0402 SMD	0402	Panasonic - ECG	ERJ-2RKF1211X
44	222-3892	3	R214A, R214B, R214C	Resistor	12700	12.7k	RES 12.7K OHM 1/10W 1% 0402 SMD	0402	Panasonic - ECG	ERJ-2RKF1272X
45	222-3893	3	R405A, R405B, R405C	Resistor	130000	130k	RES 130K OHM 1/10W 1% 0402 SMD	0402	Panasonic - ECG	ERJ-2RKF1303X
46	222-3894	3	R419A, R419B, R419C	Resistor	1330	1.33k	RES 1.33K OHM 1/10W 1% 0402 SMD	0402	Panasonic - ECG	ERJ-2RKF1331X
47	222-3895	3	R117A, R117B, R117C	Resistor	1430	1.43k	RES 1.43K OHM 1/10W 1% 0402 SMD	0402	Panasonic - ECG	ERJ-2RKF1431X
48	222-3896	3	R317A, R317B, R317C	Resistor	1580	1.58k	RES 1.58K OHM 1/10W 1% 0402 SMD	0402	Panasonic - ECG	ERJ-2RKF1581X
49	222-3897	3	R417A, R417B, R417C	Resistor	1620	1.62k	RES 1.62K OHM 1/10W 1% 0402 SMD	0402	Panasonic - ECG	ERJ-2RKF1621X
50	222-3898	3	R319A, R319B, R319C	Resistor	1910	1.91k	RES 1.91K OHM 1/10W 1% 0402 SMD	0402	Panasonic - ECG	ERJ-2RKF1911X
51	222-3899	3	R111A, R111B, R111C	Resistor	24300	24.3k	RES 24.3K OHM 1/10W 1% 0402 SMD	0402	Panasonic - ECG	ERJ-2RKF2432X
52	222-3900	3	R207A, R207B, R207C	Resistor	2490	2.49k	RES 2.49K OHM 1/10W 1% 0402 SMD	0402	Panasonic - ECG	ERJ-2RKF2491X
53	222-3901	3	R414A, R414B, R414C	Resistor	28700	28.7k	RES 28.7K OHM 1/10W 1% 0402 SMD	0402	Panasonic - ECG	ERJ-2RKF2872X
54	222-3903	3	R112A, R112B, R112C	Resistor	3090	3.09k	RES 3.09K OHM 1/10W 1% 0402 SMD	0402	Panasonic - ECG	ERJ-2RKF3091X
55	222-3904	3	R219A, R219B, R219C	Resistor	3240	3.24k	RES 3.24K OHM 1/10W 1% 0402 SMD	0402	Panasonic - ECG	ERJ-2RKF3241X
56	222-3905	3	R305A, R305B, R305C	Resistor	33200	33.2k	RES 33.2K OHM 1/10W 1% 0402 SMD	0402	Panasonic - ECG	ERJ-2RKF3322X
57	222-3906	3	R412A, R412B, R412C	Resistor	3400	3.40k	RES 3.40K OHM 1/10W 1% 0402 SMD	0402	Panasonic - ECG	ERJ-2RKF3401X
58	222-3907	3	R107A, R107B, R107C	Resistor	3570	3.57k	RES 3.57K OHM 1/10W 1% 0402 SMD	0402	Panasonic - ECG	ERJ-2RKF3571X
59	222-3908	3	R411A, R411B, R411C	Resistor	38300	38.3k	RES 38.3K OHM 1/10W 1% 0402 SMD	0402	Panasonic - ECG	ERJ-2RKF3832X
60	222-3909	3	R105A, R105B, R105C	Resistor	442000	442k	RES 442K OHM 1/10W 1% 0402 SMD	0402	Panasonic - ECG	ERJ-2RKF4423X
61	222-3910	3	R110A, R110B, R110C	Resistor	45300	45.3k	RES 45.3K OHM 1/10W 1% 0402 SMD	0402	Panasonic - ECG	ERJ-2RKF4532X
62	222-3911	3	R206A, R206B, R206C	Resistor	46400	46.4k	RES 46.4K OHM 1/10W 1% 0402 SMD	0402	Panasonic - ECG	ERJ-2RKF4642X
63	222-3912	3	R312A, R312B, R312C	Resistor	4870	4.87k	RES 4.87K OHM 1/10W 1% 0402 SMD	0402	Panasonic - ECG	ERJ-2RKF4871X
64	222-3913	3	R205A, R205B, R205C	Resistor	56200	56.2k	RES 56.2K OHM 1/10W 1% 0402 SMD	0402	Panasonic - ECG	ERJ-2RKF5622X
65	222-3914	3	R314A, R314B, R314C	Resistor	7500	7.5k	RES 7.50K OHM 1/10W 1% 0402 SMD	0402	Panasonic - ECG	ERJ-2RKF7501X
66	222-3915	3	R211A, R211B, R211C	Resistor	78700	78.7k	RES 78.7K OHM 1/10W 1% 0402 SMD	0402	Panasonic - ECG	ERJ-2RKF7872X
67	222-3916	3	R212A, R212B, R212C	Resistor	8250	8.25k	RES 8.25K OHM 1/10W 1% 0402 SMD	0402	Panasonic - ECG	ERJ-2RKF8251X
68	222-3789	6	R4A, R4B, R4C, R9A, R9B, R9C	Resistor	1000	1.0k	RES 1.00K OHM 1/10W 1% 0402 SMD	0402	Panasonic - ECG	ERJ-2RKF1001X
69	222-3917	6	R307A, R307B, R307C, R407A, R407B, R407C	Resistor	3920	3.92k	RES 3.92K OHM 1/10W 1% 0402 SMD	0402	Panasonic - ECG	ERJ-2RKF3921X
70	222-3918	6	R106A, R106B, R106C, R311A, R311B, R311C	Resistor	54900	54.9k	RES 54.9K OHM 1/10W 1% 0402 SMD	0402	Panasonic - ECG	ERJ-2RKF5492X
71	222-3919	6	R302A, R302B, R302C, R309A, R309B, R309C	Resistor	80600	80.6k	RES 80.6K OHM 1/10W 1% 0402 SMD	0402	Panasonic - ECG	ERJ-2RKF8062X
72	222-3920	6	R306A, R306B, R306C, R406A, R406B, R406C	Resistor	86600	86.6k	RES 86.6K OHM 1/10W 1% 0402 SMD	0402	Panasonic - ECG	ERJ-2RKF8662X
73	222-3921	6	R102A, R102B, R102C, R109A, R109B, R109C	Resistor	88700	88.7k	RES 88.7K OHM 1/10W 1% 0402 SMD	0402	Panasonic - ECG	ERJ-2RKF8872X

TK Analog Board - Quad Frequency

DWG:	ID NO:	VER:
216-1106	ID0301496	1

Item	CMW P/N	Quantity	Designator	Type	Value	Comment	Description	Package	Manufacturer	Manufacturer P/N
74	222-3707	69	R12A, R12B, R12C, R13A, R13B, R13C, R14A, R14B, R14C, R15, R16, R17, R18, R19, R20, R21, R22, R27A, R27B, R27C, R28A, R28B, R28C, R71A, R71B, R71C, R72, R91A, R91B, R91C, R92A, R92B, R92C, R93A, R93B, R93C, R94A, R94B, R94C, R95A, R95B, R95C, R96A, R96B, R96C, R115A, R115B, R115C, R116A, R116B, R116C, R215A, R215B, R215C, R216A, R216B, R216C, R315A, R315B, R315C, R316A, R316B, R316C, R415A, R415B, R415C, R416A, R416B, R416C	Resistor	10	10	RES 10.0 OHM 1/16W 1% 0402 SMD	0402	Rohm Semiconductor	MCR01MZPF10R0
75	222-3710	9	R1A, R1B, R1C, R7A, R7B, R7C, R10A, R10B, R10C	Resistor	4990	4.99k	RES 4.99K OHM 1/10W 1% 0402 SMD	0402	Panasonic - ECG	ERJ-2RKF4991X
76	222-3922	9	R202A, R202B, R202C, R209A, R209B, R209C, R310A, R310B, R310C	Resistor	51100	51.1k	RES 51.1K OHM 1/10W 1% 0402 SMD	0402	Panasonic - ECG	ERJ-2RKF5112X

DWG:	ID:
222-3867	ID0301494

NOTE: UNLESS OTHERWISE SPECIFIED
1. DRAWING PRESENTS TOP OF PCB
2. FABRICATE IN ACCORDANCE WITH ANSI/IPC-600F,CLASS 2
3. MATERIAL: LEAD FREE, IN ACCORDANCE WITH ROHS, IPC-4101/124 MINIMUM FOR DOUBLE SIDED BOARDS AND MULTILAYER BOARDS.
4. 1 OZ. COPPER, ALL LAYERS
5. BOARD THICKNESS WILL BE .062in, +/- 10% MEASURED OVER ALL APPLIED FINISHES
6. FINISHED CONDUCTOR WIDTHS TO BE +/- .001in PER SIDE OF MASTER PATTERN SIZE.
7. ALL HOLES PLATED
8. PLATED HOLES SHALL HAVE A MINIMUM WALL THICKNESS OF 0.001in AND A MINIMUM ANNULAR RING OF 0.002in.
9. APPLY LPI SOLDERMASK TO BOTH SIDES OF THE BOARD, GREEN MATTE FINISH, SHALL MEET MINIMUM REQUIREMENTS OF IPC-SM-840 CLASS III. SOLDERMASK REGISTRATION SHALL BE .005in FROM TRUE PAD CENTER.
10. SILKSCREEN BOARD WITH WHITE EPOXY INK.
11. CIRCUIT FINISH TYPE WILL BE ELECTROLESS NICKEL/IMMERSION GOLD (ENIG): ELECTROLESS NICKEL THICKNESS SHALL BE 120 TO 240 uIN. IMMERSION GOLD THICKNESS SHALL BE 2 TO 4 uIN.

Layer Stack Up Detail for: 222-3867.PcbDoc

Layer Name
Top Layer
Mid-Layer 1
Mid-Layer 3
Internal Plane 1
Internal Plane 2
Mid-Layer 2
Mid-Layer 4
Bottom Layer

RELEASE DATA		DRAFT	STDS CHK	TECH REV
VER	DATE			
1	10/11/2012	ETN	ETN	SBC

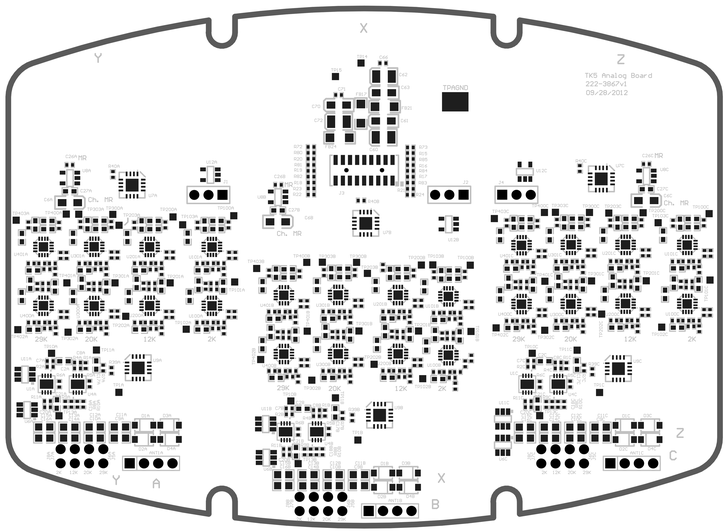

CMW Electronics®

Name:		
TK Analog Board		
File Name:	Drawing:	VER:
TK5 Analog Board.PcbDoc	222-3867	1

SCALE: 1.00

DWG:	ID:
222-3867	ID0301494

RELEASE DATA		DRAFT	STDS CHK	TECH REV
VER	DATE			

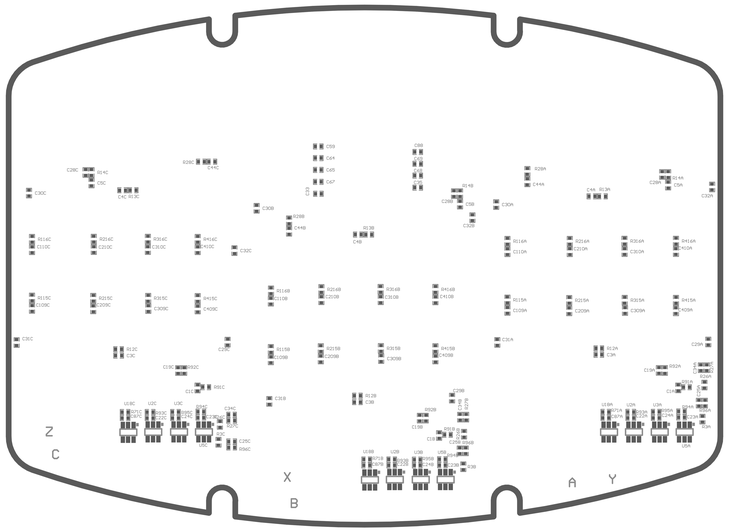

Ditch Witch® ELECTRONICS

Name:		
TK Analog Board		
File Name:	Drawing:	VER:
TK5 Analog Board.PcbDoc		
SCALE: 1.00		