DWG	ID NO.
216-1099	ID0296290

RELEASE DATA		DRAWN BY:	STDS CK:	TECH REV:
VER	DATE			
1	10/10/2012	SBC	BJS	SBC

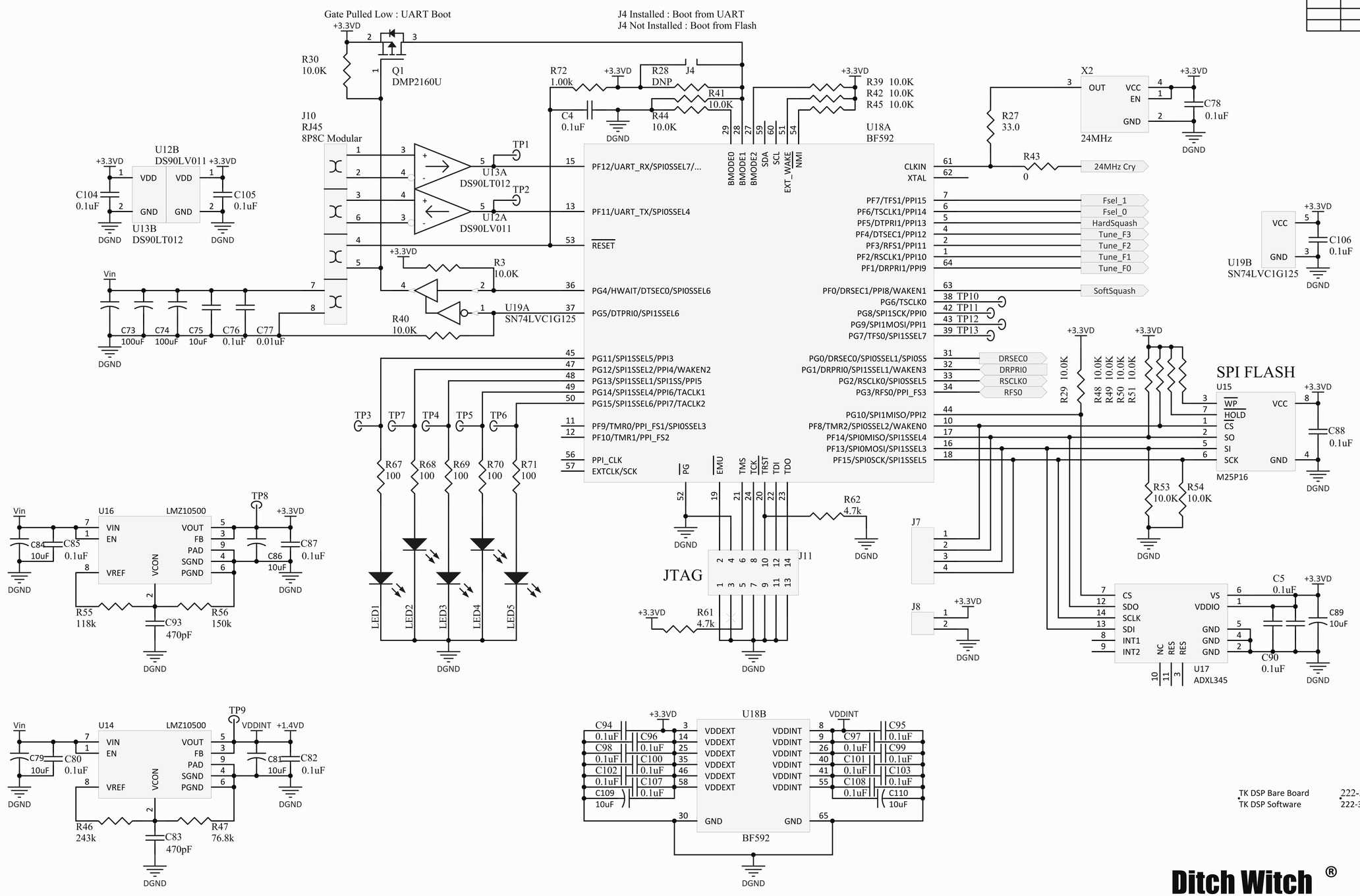

TK DSP Bare Board 222-3866v01
TK DSP Software 222-3690

Ditch Witch ® Subsite ®

Title: TK DSP PCB Assembly - DSP/Power	
DWG: 216-1099	Version: 1
Date: 10/11/2012	Sheet 1 of 2
File Name: DSP.SchDoc	Drawn by: Bucky Cole

DWG	ID NO.
216-1099	ID0296290

RELEASE DATA		DRAWN BY:	STDS CK:	TECH REV:
VER	DATE			

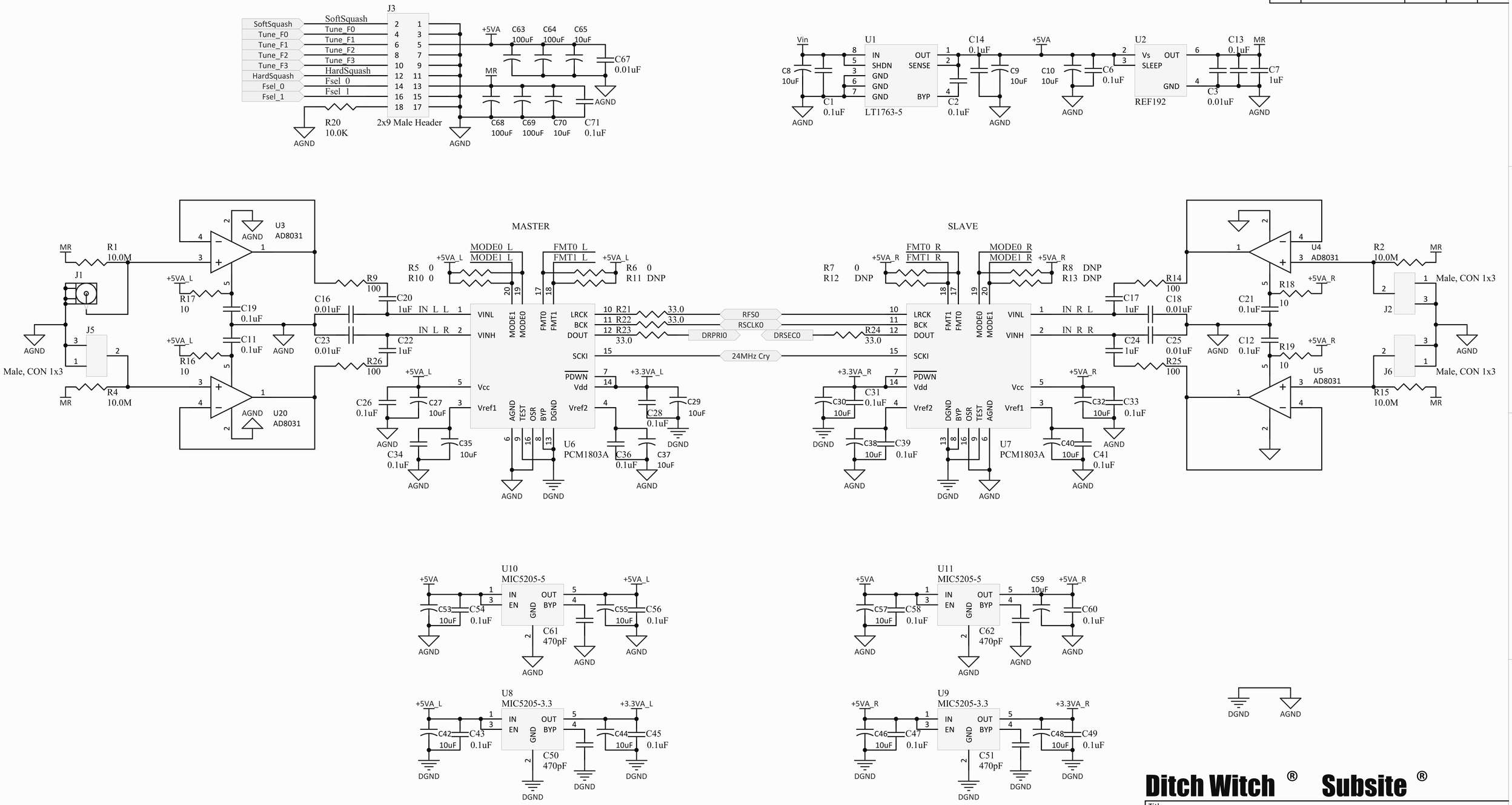

Ditch Witch ® Subsite ®

Title	
TK DSP PCB Assembly - A/D Converters	
DWG: 216-1099	Version 1
Date: 10/11/2012	Sheet 2 of 2
File Name: A2Ds.SchDoc	Drawn by: Bucky Cole

TK DSP PCB Assembly

DWG:	ID NO:	VER:
216-1099	ID0296290	1

Item	CMW P/N	Quantity	Designator	Type	Value	Comment	Description	Package	Manufacturer	Manufacturer P/N
1	222-3866v01	1		Bare Board		TK DSP Bare Board	TK DSP Bare Board			
2	222-1227	48	C1, C2, C4, C6, C11, C12, C13, C14, C21, C26, C28, C31, C33, C34, C36, C39, C41, C43, C45, C47, C49, C54, C56, C58, C60, C71, C76, C78, C80, C82, C85, C87, C88, C94, C95, C96, C97, C98, C99, C100, C101, C102, C103, C104, C105, C106, C107, C108	Capacitor, Ceramic	0.1	0.1uF	CAP CER 0.1UF 25V 10% X7R 0603	0603	Panasonic - ECG	ECJ-1VB1E104K
3	221-695	7	C3, C16, C18, C23, C25, C67, C77	Capacitor	0.01	0.01uF	CAP CER 10000PF 25V X7R 0603	0603	TDK Corporation	C1608X7R1E103J
4	222-4004	5	C7, C17, C20, C22, C24	Capacitor	1	1uF	CAP CER 1UF 10V 5% X7R 0805	0805	AVX Corporation	0805ZC105JAT2A
5	222-1002	28	C8, C9, C10, C27, C29, C30, C32, C35, C37, C38, C40, C42, C44, C46, C48, C53, C55, C57, C59, C65, C70, C75, C79, C81, C84, C86, C109, C110	Capacitor	10	10uF	CAP TANTALUM 10UF 16V 10% SMD	3216	AVX Corporation	TAJA106K016RNJ
6	222-4005	6	C50, C51, C61, C62, C83, C93	Capacitor	0.00047	470pF	CAP CER 470PF 100V 10% X7R 0603	0603	Murata Electronics North America	GRM188R72A471KA01D
7	222-2403	6	C63, C64, C68, C69, C73, C74	Capacitor, Tantalum	100	100uF	CAP TANT 100UF 10V 20% 1210	3528	AVX	TPSB107M010R0400
8	222-4006	3	J2, J5, J6	Connector, 1x3	1x3 Male Header	Male, CON 1x3	CONN HEADER 3POS SGL .1" Thru Hole	0.1" Centers, .165" Post Height	Samtec Inc	MTLW-103-05-T-S-165
9	222-4131	1	J3	Connector, 2x9	2x9 Male Header	Male, CON 2x9	CONN HEADER 18POS DUAL .05" SMD	0.050" Pitch, Socket Strip	Samtec	FTSH-109-01-F-DV-P
10	222-4008	1	J10	Connector, Modular	RJ45	8P8C Modular	Jack, 8P8C, Vert.	RJ45-VERT	Assmann WSW Components	A-2014-2S-4-N-R
11	222-3747	5	LED1, LED2, LED3, LED4, LED5	LED	LED, Red 2V 20mA	Red	LED CHIPLED 633NM RED 0805 SMD	0805	OSRAM Opto Semiconductors Inc	LS R976-NR-1
12	222-4132	1	Q1	MOSFET-P	DMP2160U	DMP2160U	P-Ch, 20V 3.2A	SOT-23	Diodes Inc	DMP2160U-7
13	222-3199	3	R2, R4, R15	Resistor	10000000	10.0M	RES 10M OHM 5% 1/10W 0603 SMD	0603	Panasonic - ECG	ERJ-3GEYJ106V
14	221-683	15	R3, R20, R30, R39, R40, R41, R42, R44, R45, R48, R49, R50, R51, R53, R54	Resistor	10000	10.0K	RES 10.0K OHM 1/10W 1% 0603 SMD	0603	Panasonic - ECG	ERJ-3EKF1002V
15	221-677	5	R5, R6, R7, R10, R43	Resistor	0	0	RES 0.0 OHM 1/10W 0603 SMD	0603	Vishay	CRCW06030000Z0EA
16	222-1503	9	R9, R14, R25, R26, R67, R68, R69, R70, R71	Resistor	100	100	RES 100 OHM 1/10W 1% 0603 SMD	0603	Panasonic - ECG	ERJ-3EKF1000V
17	222-1108	3	R16, R18, R19	Resistor	10	10	RES 10.0 OHM 1/10W 1% 0603 SMD	0603	Rohm Semiconductor	MCR03EZPFX10R0
18	222-1852	5	R21, R22, R23, R24, R27	Resistor, chip	33	33.0	RES 33.0 OHM 1/10W 1% 0603 SMD	0603	Vishay/Dale	CRCW060333R0FKEA
19	222-1460	1	R46	Resistor	243000	243k	RES 243K OHM 1/10W 1% 0603 SMD	0603	Rohm Semiconductor	MCR03EZPFX2433
20	222-4009	1	R47	Resistor	76800	76.8k	RES 76.8K OHM 1/10W 1% 0603 SMD	0603	Rohm Semiconductor	MCR03EZPFX7682
21	222-4010	1	R55	Resistor	118000	118k	RES 118K OHM 1/10W 1% 0603 SMD	0603	Rohm Semiconductor	MCR03EZPFX1183
22	222-4011	1	R56	Resistor	150000	150k	RES 150K OHM 1/10W 1% 0603 SMD	0603	Rohm Semiconductor	MCR03EZPFX1503
23	222-1849	1	R72	Resistor, chip	1000	1.00k	RES 1.0K OHM 1/10W .1% 0603 SMD	0603	Panasonic - ECG	ERA-3AEB102V
24	222-2108	1	U1	IC, LDO Regulator	LT1763-5	LT1763-5	IC REG LDO 500MA 5V MCRPWR 8SOIC	SO-8	Linear Technology	LT1763CS8-5#PBF
25	222-4012	1	U2	IC, Voltage Reference	REF192	REF192	IC VREF SERIES PREC 2.5V 8-SOIC	SO-8	Analog Devices Inc	REF192ESZ
26	222-460	3	U4, U5, U20	IC, Op Amp	AD8031	AD8031	IC OPAMP VF R-R LP LDIST SOT23-5	SOT-23-5	Analog Devices Inc	AD8031ARTZ-REEL7
27	222-4013	2	U6, U7	IC, ADC	PCM1803A	PCM1803A	IC ADC 24BIT STEREO 20-SSOP	SSOP-20	Texas Instruments	PCM1803ADB
28	222-4014	2	U8, U9	IC	MIC5205-3.3	MIC5205-3.3	IC REG LDO 150MA 3.3V 1% SOT23-5	SOT23-5	Micrel Inc	MIC5205-3.3YM5
29	222-4015	2	U10, U11	IC	MIC5205-5	MIC5205-5	IC REG LDO 150MA 5.0V 1% SOT23-5	SOT23-5	Micrel Inc	MIC5205-5.0YM5
30	222-3774	1	U12	ICs	DS90LV011	DS90LV011	IC DRIVER SGL HS DIFF SOT23-5	SOT23-5	National Semiconductor	DS90LV011ATMF/NOPB
31	222-3775	1	U13	ICs	DS90LT012	DS90LT012	IC RCVR LVDS DIFF RTERM SOT23-5	SOT23-5	National Semiconductor	DS90LT012ATMF/NOPB
32	222-3741	2	U14, U16	Misc	DC-DC Nano module	LMZ10500	IC DC-DC NANO MODULE	SE08A	National Semiconductor	LMZ10500SEE/NOPB
33	222-4016	1	U15	IC	M25P16	M25P16	IC FLASH 16MBIT 75MHZ 8SOIC	SO-8-SST	Numonyx	M25P16-VMW6TG
34	222-4017	1	U18	IC	BF592	BF592	IC DSP CTRLR 64LFCSP	LFCSP-64	Analog Devices Inc	ADSP-BF592KCPZ
35	222-4019	1	X2	Crystal	24000000	24MHz	OSCILLATOR 24.000MHZ 3.3V SMD	OSC-5.0X3.2	Abracon Corporation	ASFL1-24.000MHZ-EK-T

DWG:	ID:
222-3866	ID0301493

RELEASE DATA		DRAFT	STDS CHK	TECH REV
VER	DATE			
1	10/10/2012	ETN	ETN	SBC

NOTE: UNLESS OTHERWISE SPECIFIED
1. DRAWING PRESENTS TOP OF PCB
2. FABRICATE IN ACCORDANCE WITH ANSI/IPC-600F,CLASS 2
3. MATERIAL: LEAD FREE, IN ACCORDANCE WITH ROHS, IPC-4101/124 MINIMUM FOR DOUBLE SIDED BOARDS AND MULTILAYER BOARDS.
4. 1 OZ. COPPER, ALL LAYERS
5. BOARD THICKNESS WILL BE .062in, +/- 10% MEASURED OVER ALL APPLIED FINISHES
6. FINISHED CONDUCTOR WIDTHS TO BE +/- .001in PER SIDE OF MASTER PATTERN SIZE.
7. ALL HOLES PLATED
8. PLATED HOLES SHALL HAVE A MINIMUM WALL THICKNESS OF 0.001in AND A MINIMUM ANNULAR RING OF 0.002in.
9. APPLY LPI SOLDERMASK TO BOTH SIDES OF THE BOARD, GREEN MATTE FINISH, SHALL MEET MINIMUM REQUIREMENTS OF IPC-SM-840 CLASS III. SOLDERMASK REGISTRATION SHALL BE .005in FROM TRUE PAD CENTER.
10. SILKSCREEN BOARD WITH WHITE EPOXY INK.
11. CIRCUIT FINISH TYPE WILL BE ELECTROLESS NICKEL/IMMERSION GOLD (ENIG): ELECTROLESS NICKEL THICKNESS SHALL BE 120 TO 240 uIN. IMMERSION GOLD THICKNESS SHALL BE 2 TO 4 uIN.

Layer Stack Up Detail for: 222-3866.PcbDoc

Layer Name
Top Layer
Mid-Layer 2
Internal Plane 1
Internal Plane 2
Mid-Layer 1
Bottom Layer

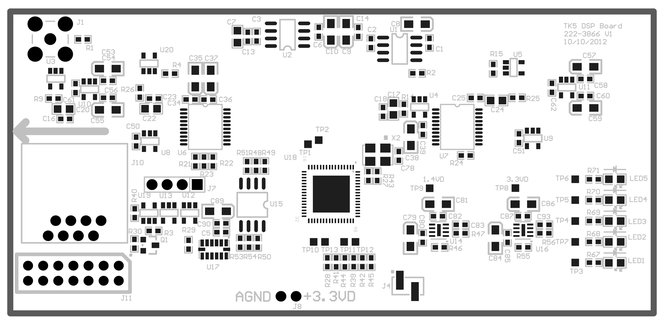

Ditch Witch® ELECTRONICS

Name:		
TK DSP Assembly		
File Name: 222-3866.PcbDoc	Drawing: 222-3866	VER: 1
SCALE: 1.00		

DWG:	ID:
222-3866	ID0301493

RELEASE DATA		DRAFT	STDS CHK	TECH REV
VER	DATE			

SEE PAGE 1

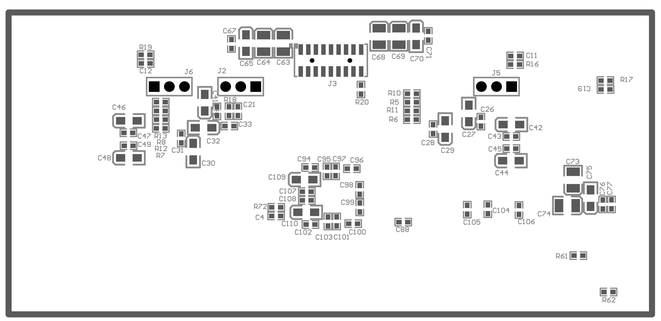

Ditch Witch® ELECTRONICS

Name:		
TK DSP Assembly		
File Name: 222-3866.PcbDoc	Drawing: 222-3866	VER: 1
SCALE: 1.00		