DWG:	ID:
216-1080	ID0286033

RELEASE DATA		DRAFT	STDS CHK	TECH REV
VER	DATE			
0	12/09/2011	ETN		BJS
1	04/02/2012	ETN		BJS
2	09/18/2012	ETN	SBC	BJS

..

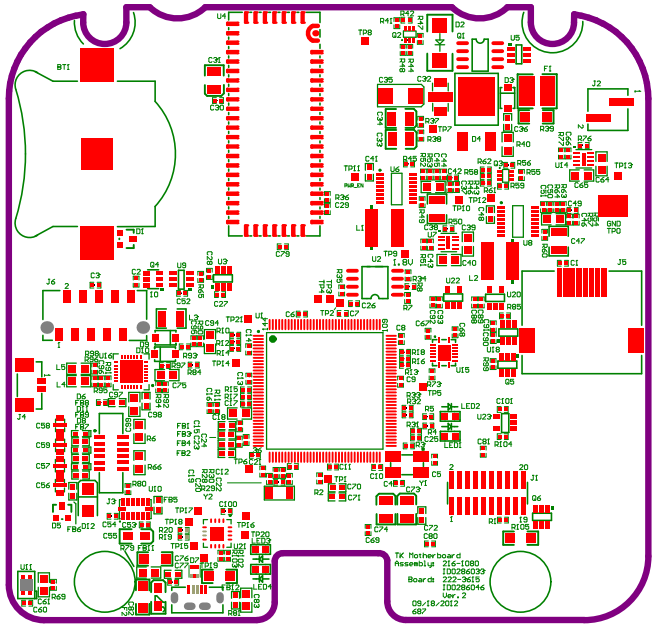

CMW Electronics

Name:		
TK Motherboard		
File Name:	Drawing:	VER:
TK Motherboard.PcbDoc	216-1080	2
SCALE: 1.00		

DWG: 216-1080 ID: ID0286033

RELEASE DATA		DRAFT	STDS CHK	TECH REV
VER	DATE			

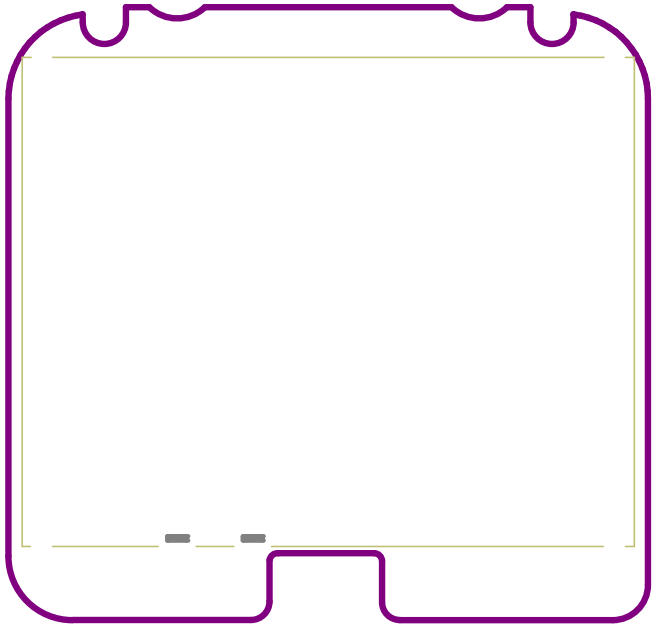

Ditch Witch® ELECTRONICS

Name: TK Motherboard

File Name: TK Motherboard.PcbDoc

Drawing:

VER:

SCALE: 1.00

Item	Qu	CMW P/N	Designator	Type	Comment	Description	Package	Manufacturer	Manufacturer P/N	Equiv
1	1	222-3622	BKLT1	LED Backlight	LED Backlight	Backlight for 4.4" LCD, LED, 5V @ 90 mA, 500 cd/m²	Backlight Module	Densitron Displays	15-0016-000	
2	1	222-3722	BT1	Battery Holder	2032 coin cell holder	FOR 2032	Battery Holder	Memory Protection Devices	BHX1-2032-SM	
3	41	222-2405	C1, C2, C3, C6, C7, C8, C9, C10, C11, C12, C13, C14, C15, C16, C17, C19, C21, C23, C25, C26, C27, C28, C29, C30, C52, C53, C54, C60, C67, C68, C69, C77, C79, C80, C81, C88, C90, C91, C92, C100, C101	Capacitor, Ceramic	.1uF	CAP CER 0.1UF 16V 10% X7R 0402	0402	Kemet	C0402C104K4RACTU	Y
4	4	222-3723	C4, C5, C44, C50	Capacitor	10pF	CAP CER 10PF 50V 5% NP0 0402	0402	Murata Electronics North America	GRM1555C1H100JZ01D	Y
5	1	222-1031	C18	Capacitor	2.2uF	CAP CERAMIC 2.2UF 10V X7R 0805	0805	Kemet	C0805C225K8RACTU	Y
6	3	222-3724	C20, C22, C66	Capacitor	18 pF	CAP CER 18PF 50V 5% NP0 0402	0402	TDK Corporation	C1005C0G1H180J	Y
7	1	222-3725	C24	Capacitor	.01uF	CAP CER 10000PF 16V 10% X7R 0402	0402	Murata Electronics North America	GRM155R71C103KA01D	Y
8	5	222-3234	C31, C33, C34, C73, C74	Capacitor, Tantalum	33uF	CAP TANT 33UF 16V 10% 1411	3528	Vishay/Sprague	TR3B336K016C0350	Y
9	1	222-3696	C32	EMI Filter	EMI Filter	.2UF 1806	1806	Murata Electronics North America	NFM41PC204F1H3L	
10	1	222-3192	C35	Capacitor, Tant	100uF	CAP TANT 100UF 16V 10% 2312	6032	Kemet	T491C107K016ZT	Y
11	2	222-1234	C36, C97	Capacitor, Ceramic	0.1uF	CAP CER 0.1UF 50V 10% X7R 0603	0603	Kemet	C0603C104K5RACTU	Y
12	6	222-1838	C37, C39, C40, C46, C64, C65	Capacitor, Ceramic	10uF	CAP CER 10UF 16V 10% X5R 0805	0805	Murata	GRM21BR61C106KE15L	Y
13	2	222-3753	C38, C47	Capacitor	22uF	CAP CER 22UF 10V Y5V 1210	1210	Johanson Dielectrics Inc	100S41Y226ZV4E	Y
14	2	222-3754	C41, C48	Capacitor, Ceramic	56 nF	56000 pF, 16 V, 10%, X7R	0603	Murata Electronics North America	GRM188R71C563KA01D	Y
15	2	222-3755	C42, C49	Capacitor	30pF	CAP CER 30PF 50V 5% NP0 0402	0402	Murata Electronics North America	GRM1555C1H300JZ01D	Y
16	1	222-3727	C43	Capacitor, Ceramic	470pF	CAP CER 470PF 50V 10% X7R 0402	0402	Kemet	C0402C471K5RACTU	Y
17	2	222-3756	C45, C51	Capacitor	330pF	CAP CER 330PF 50V 10% X7R 0402	0402	Murata Electronics North America	GRM155R71H331KA01D	Y
18	2	222-3728	C55, C82	Capacitor	10uF	CAPACITOR TANT 10UF 10V 10% SMD	3216	Kemet	T491A106K010AT	Y
19	4	222-3726	C56, C57, C58, C59	Capacitor, EMI Filter	2200 pF	3-terminal, 1A, 50V	0805	Murata Electronics North America	NFM21CC222R1H3D	
20	4	222-1494	C61, C75, C94, C99	Capacitor, Ceramic	4.7uF	CAP CER 4.7UF 16V 10% X5R 0805	0805	Murata	GRM21BR61C475KA88L	Y
21	4	221-831	C70, C71, C72, C76	Capacitor, Ceramic	1 uF	CAP CER 1UF 16V 10% X7R 0603	0603	Taiyo Yuden	EMK107B71C5KA-T	Y
22	1	219-274	C83	Capacitor, Ceramic	.01uF	CAP CER 10000PF 50V 10% X7R 0805	0805	AVX	08055C103KAT2A	Y
23	3	222-3758	C89, C93, C95	Capacitor	1000pF	CAP CER 1000PF 50V 10% X7R 0402	0402	Murata Electronics North America	GRM155R71H102KA01D	Y
24	1	222-3759	C96	Capacitor	68pF	CAP CER 68PF 50V 5% NP0 0402	0402	Murata Electronics North America	GRM1555C1H680JZ01D	Y
25	1	222-1935	C98	Capacitor, Ceramic	1uF	CAP CER 1UF 16V 10% X7R 0603	0603	TDK	C1608X7R1C105K	Y
26	2	222-3737	D1, D5	Diode, Schottky	BAT54C-7-F	DUAL 30V	SOT23-3	Diodes Inc	BAT54C-7-F	
27	1	222-3738	D2	Diode, Schottky	SL23	2A, 30V	SMB	Vishay/General Semiconductor	SL23-E3/52T	
28	1	222-3760	D3	Diode, Zener	7.5 V	7.5 V, 500 mW	SOD-123	Diodes Inc	BZT52C7V5-7-F	
29	1	222-3433	D4	SCR	TS820	SCR 8A 600V DPAK	DPAK	STMicroelectronics	TS820-600B-TR	
30	3	222-3864	D6, D8, D11	Diode, TVS	TVS 3.3V	TVS ESD ASD 158W 3.3V SOD-523	SOD-523	ON Semiconductor	ESD5Z3.3T1G	
31	1	222-3026	D7	DIODE, TVS	TVS, 5V	IC TVS ARRAY 4LINE ESD 5V SC-89	SC-89-6	Semtech	UCLAMP0504A.TCT	
32	1	222-1522	D9	Diode, Schottky	MBR0520	DIODE SCHOTTKY 0.5A 20V SOD-123	SOD-123	Fairchild Semiconductor	MBR0520L	
33	1	222-2375	D10	Diode	BAS16W	75V, 200mA	SOD-123	Micro Commercial Co	BAS16W-TP	
34	1	222-3699	D12	Diode, TVS	14V TVS	DIODE TVS 14V 400W UNI 5% SMA	DO-214AC, SMA	Littelfuse Inc	SMAJ14A	
35	1	222-3761	F1	Polyswitch	Fuse	POLYSWITCH 1.25A RESET FUSE SMD	1812	Tyco Electronics	MINISMDC125F/16-2	
36	1	222-3729	F2	Thermistor	Fuse	PTC 6V, 1.10A, Resettable	1206	Littelfuse Inc	1206L110THYR	
37	8	222-1472	FB1, FB2, FB3, FB4, FB6, FB7, FB8, FB9	Ferrite Bead, Chip	FeBd	100MHz, 2500 Ohm, 50mA	0603	Murata	BLM18BD252SN1D	
38	1	222-3762	FB5	Ferrite Bead, Chip	MMZ	FERRITE CHIP 100 OHM 1A 0603	0603	TDK Corporation	MPZ1608D101B	
39	2	221-893	FB11, FB12	Ferrite Bead	600 ohm	500mA, 600 ohm	1206	Laird-Signal Integrity Products	HZ1206E601R-10	
40	1	222-3739	J1	Connector, 2x10	CONN2x10	Header, .050", 20 pos, key shrouded	50 mil SMT header	Samtec	FTSH-110-01-L-DV-K	
41	1	222-3763	J2	Terminal Strip	2x1 Header, IPL1	2x1 MINI-POWER TERMINAL STRIP, SMD	SMD Header	Samtec	IPL1-102-02-L-S-K	
42	1	222-3764	J3	Connector, 1x6	1x6 ZIF	FFC/FPC, 1mm, VERT	SMD	Molex Connector Corporation	52610-0671	
43	1	222-3765	J4	Connector, Header	1x2	2 Pos, 1.25 mm, Vertical, SMD	1x2 SMD Header	Molex Inc	53398-0271	
44	1	222-3766	J5	Connector, Modular	8P8C Modular	Jack, 8P8C, R/A	8p8c R/A Connector	Samtec	MODS-F-8P8C-L-S-N-N-SM	
45	1	222-3721	J6	Header, SMT	1x10 Conn	10 pos, 1.27 mm	Header, 10x1 SMT	Molex Connector Corporation	90814-0810	
46	1	222-3869	J7	Connector, USB micro B	Micro USB-B	USB micro B Receptacle Vertical	Micro USB-B	Hirose Electric Co Ltd	ZX80-B-5P	
47	1	222-3748	J8	Connector, FPC	LS044 LCD Connector	FPC, 10 Pos, .5 mm, R/A, for Sharp LS044	10 pos. FPC Connector	TE Connectivity	1-1734592-0	
48	2	222-2032	L1, L2	Inductor	6.8uH	SMT Inductor	MSS6132	CoilCraft	MSS6132-682MLC	
49	1	222-1498	L3	Inductor	10uH	10%, 300mA	1210	Murata Electronics North America	LQH32CN100K23L	
50	2	222-3767	L4, L5	Inductor	22 uH	100MA 10%	0805 (2012 Metric)	Taiyo Yuden	LBR2012T220K	
51	1	222-3640	LCD1	LCD	4.4" Memory LCD	Memory LCD, 4.4", HR-TFT Transflective, QVGA	LCD Module	Sharp	LS044Q7DH01	
52	4	222-3747	LED1, LED2, LED3, LED4	LED	Red	LED 660NM SUPER RED DIFF 0603SMD	0603-LED	Lumex Opto/Components Inc	SML-LX0603SRW-TR	
53	1	222-3768	Q1	MOSFET, P-Ch	IRF9317	P-Ch, 30V, 16A	SO-8	International Rectifier	IRF9317TRPBF	
54	2	222-2421	Q2, Q3	Transistor, Dual	MBT3946DW1T1	PNP, NPN	SC-70	ON Semi	MBT3946DW1T1G	
55	1	222-3752	Q4	Discrete	IRF5803	MOSFET P-CH 40V 3.4A 6-TSOP	SOT-23-6	International Rectifier	IRF5803TRPBF	
56	2	222-3705	Q5, Q6	Mosfet, N-Ch	DMG6402LDM	30V, 5.3A	SOT-23-6	Diodes Inc	DMG6402LDM-7	
57	1	222-2413	R3	Resistor	1M	RES 1.00M OHM 1/16W 1% 0402 SMD	0402	Vishay	CRCW04021M00FKED	Y
58	12	222-3730	R4, R5, R8, R10, R12, R13, R14, R15, R16, R17, R18, R80	Resistor	33	RES 33 OHM 1/10W 5% 0402 SMD	0402	Panasonic - ECG	ERJ-2GEJ330X	Y
59	3	221-723	R6, R40, R66	Resistor	0	RES 0.0 OHM 1/8W 0805 SMD	0805	Panasonic - ECG	ERJ-6GEY0R00V	Y
60	13	222-2408	R7, R31, R34, R35, R36, R43, R49, R54, R60, R73, R84, R85, R99	Resistor	10k	RES 10.0K OHM 1/16W 1% 0402 SMD	0402	Vishay	CRCW040210K0FKED	Y
61	3	222-2419	R28, R30, R104	Resistor	0	RES 0.0 OHM 1/16W 0402 SMD	0402	Vishay	CRCW0402000Z0ED	Y
62	2	222-3731	R32, R33	Resistor	4.7k	RES 4.70K OHM 1/10W 1% 0402 SMD	0402	Panasonic - ECG	ERJ-2RKF4701X	Y
63	1	222-3778	R37	Resistor	620k	RES 620K OHM 1/10W 1% 0402 SMD	0402	Panasonic - ECG	ERJ-2RKF6203X	Y
64	1	222-3779	R38	Resistor	180k	RES 180K OHM 1/10W 1% 0402 SMD	0402	Panasonic - ECG	ERJ-2RKF1803X	Y
65	1	222-1655	R39	Resistor	100	RES 100 OHM 1/4W 1% 1206 SMD	1206	Vishay	CRCW1206100RFKEA	Y
66	1	222-3780	R41	Resistor	470k	RES 470K OHM 1/10W 1% 0402 SMD	0402	Panasonic - ECG	ERJ-2RKF4703X	Y
67	4	222-3711	R42, R44, R56, R58	Resistor	100k	RES 100K OHM 1/10W 1% 0402 SMD	0402	Panasonic - ECG	ERJ-2RKF1003X	Y
68	3	222-3781	R45, R59, R91	Resistor	200k	RES 200K OHM 1/10W 1% 0402 SMD	0402	Panasonic - ECG	ERJ-2RKF2003X	Y
69	1	222-3782	R46	Resistor	649k	RES 649K OHM 1/10W 1% 0402 SMD	0402	Panasonic - ECG	ERJ-2RKF6493X	Y
70	5	222-3783	R47, R61, R92, R94, R95	Resistor	20k	RES 20.0K OHM 1/10W 1% 0402 SMD	0402	Panasonic - ECG	ERJ-2RKF2002X	Y
71	4	222-3714	R48, R55, R62, R65	Resistor	47k	RES 47.0K OHM 1/10W 1% 0402 SMD	0402	Panasonic - ECG	ERJ-2RKF4702X	Y
72	1	222-3784	R50	Resistor	187k	RES 187K OHM 1/10W 1% 0402 SMD	0402	Panasonic - ECG	ERJ-2RKF1873X	Y
73	1	222-2415	R51	Resistor	82.5k	RES 82.5K OHM 1/16W 1% 0402 SMD	0402	Vishay	CRCW040282K5FKED	Y
74	1	222-3785	R52	Resistor	162k	RES 162K OHM 1/10W 1% 0402 SMD	0402	Panasonic - ECG	ERJ-2RKF1623X	Y
75	2	222-3786	R53, R64	Resistor	15k	RES 15.0K OHM 1/10W 1% 0402 SMD	0402	Panasonic - ECG	ERJ-2RKF1502X	Y
76	1	222-3787	R57	Resistor	665k	RES 665K OHM 1/10W 1% 0402 SMD	0402	Panasonic - ECG	ERJ-2RKF6653X	Y
77	1	222-3788	R63	Resistor	147k	RES 147K OHM 1/10W 1% 0402 SMD	0402	Panasonic - ECG	ERJ-2RKF1473X	Y
78	1	222-3789	R69	Resistor	1.0k	RES 1.00K OHM 1/10W 1% 0402 SMD	0402	Panasonic - ECG	ERJ-2RKF1001X	Y
79	1	222-3732	R76	Resistor	118k	RES 118K OHM 1/10W 1% 0402 SMD	0402	Panasonic	ERJ-2RKF1183X	Y
80	2	222-3733	R77, R97	Resistor	150k	RES 150K OHM 1/10W 1% 0402 SMD	0402	Panasonic - ECG	ERJ-2RKF1503X	Y
81	1	222-3746	R79	TVS - Varistor	Varistor	5.5V, 120A	0805	Littelfuse Inc	V5.5MLA0805H	Y
82	1	222-3041	R81	Resistor	1.00M	RES 1.00M OHM 1/10W 1% 0603 SMD	0603	Panasonic - ECG	ERJ-3EKF1004V	Y
83	1	222-3790	R90	Resistor	93.1k	RES 93.1K OHM 1/10W 1% 0402 SMD	0402	Panasonic - ECG	ERJ-2RKF9312X	Y
84	1	222-3791	R93	Resistor	13k	RES 13.0K OHM 1/10W 1% 0402 SMD	0402	Panasonic - ECG	ERJ-2RKF1302X	Y
85	2	222-3707	R96, R98	Resistor	10	RES 10.0 OHM 1/16W 1% 0402 SMD	0402	Rohm Semiconductor	MCR01MZPF10R0	Y
86	2	222-3734	R102, R103	Resistor	100	RES 100 OHM 1/10W 1% 0402 SMD	0402	Panasonic - ECG	ERJ-2RKF1000X	Y
87	1	222-3735	R105	Resistor	10	RES 10 OHM 1/4W 1% 1206 SMD	1206	Panasonic	ERJ-8ENF10R0V	Y
88	1	222-3745	U1	IC, Microcontroller	Kinetis K60	ARM Cortex-M4	LQFP-144	Freescale Semiconductor	MK60DN512ZVLQ10	
89	1	222-3773	U2	IC, Serial Flash	MX25L3206E	IC FLASH 1.8V 32MB 104MHZ 8SOP	8-SOIC	Macronix	MX25U3235EM2I-10G	
90	2	222-3776	U3, U18	IC	TXB0101	IC VOLT-LVL TRANSL 1BIT SOT23-6	SOT-23-6	Texas Instruments	TXB0101DBVR	
91	1	222-3740	U4	Radio Module	WT41	Bluetooth / 802.15.1 Module	SMT	Bluegiga Technologies	WT41-A-AI4	
92	2	222-3718	U5, U9	IC, Ideal Diode Ctlr	LTC4412	Powerpath	SOT-23-6 Thin	Linear Technology	LTC4412ES6#TRMPBF	
93	2	222-3777	U6, U8	IC Switching Regulator	LTC3534	BUCK/BST 1.8v - 7v OUT SYNC ADJ 0.5A	SSOP-16	Linear Technology	LTC3534EGN#PBF	
94	2	222-3741	U7, U14	Misc	LMZ10500	IC DC-DC NANO MODULE	SE08A	National Semiconductor	LMZ10500SEE/NOPB	
95	1	222-3769	U10	IC, Accelerometer	ADXL345	IC ACCEL SPI/I2C 3AX 3G 14LGA	LGA	Analog Devices Inc	ADXL345BCCZ-RL	
96	1	222-3770	U11	IC, Light Sensor	APDS-9004	AMBIENT LIGHT SENSOR	Chip LED - 4	Avago Technologies	APDS-9004-020	
97	1	222-3771	U15	IC, Level Translator	TXB0106	6-bit	16-VFQFN	Texas Instruments	TXB0106RGYR	
98	1	222-3772	U16	IC, Mono Audio Amp	LM4960	IC AMP AUDIO PWR MONO AB 28LLP	28-WFQFN	National Semiconductor	LM49605Q/NOPB	
99	1	222-3774	U20	ICs	DS90LV011	IC DRIVER SGL HS DIFF SOT23-5	SOT23-5	National Semiconductor	DS90LV011ATMF/NOPB	
100	1	222-3742	U21	IC, USB-UART	FT230X	IC USB SERIAL BASIC UART QFN-16	16-WQFN	Future Technology Devices International	FT230XQ-R	
101	1	222-3775	U22	ICs	DS90LT012	IC RCVR LVDS DIFF RTERM SOT23-5	SOT23-5	National Semiconductor	DS90LT012ATMF/NOPB	
102	1	222-3743	U23	IC, EEPROM	24AA04	IC EEPROM 4KBIT 400KHZ SOT23-5	SOT-23-5	Microchip Technology	24AA04T-I/OT	
103	1	222-3736	Y1	Crystal, 10ppm	10MHz	CRYSTAL 10.0000MHZ 10PF SMD	5.0 x 3.2mm	Abracon Corporation	ABM3B-10.000MHZ-10-1-U-T	
104	1	222-1397	Y2	Crystal	32.768kHz	32.768 kHz	CRY_CM415	Citizen	CM415-32.768KDZFTR	

DWG	ID NO.
216-1080	ID0286033

RELEASE DATA		DRAWN BY:	STDS CK:	TECH REV:
VER	DATE			
1	04/02/2012	BJS		BJS
2	09/18/2012	BJS	SBC	BJS

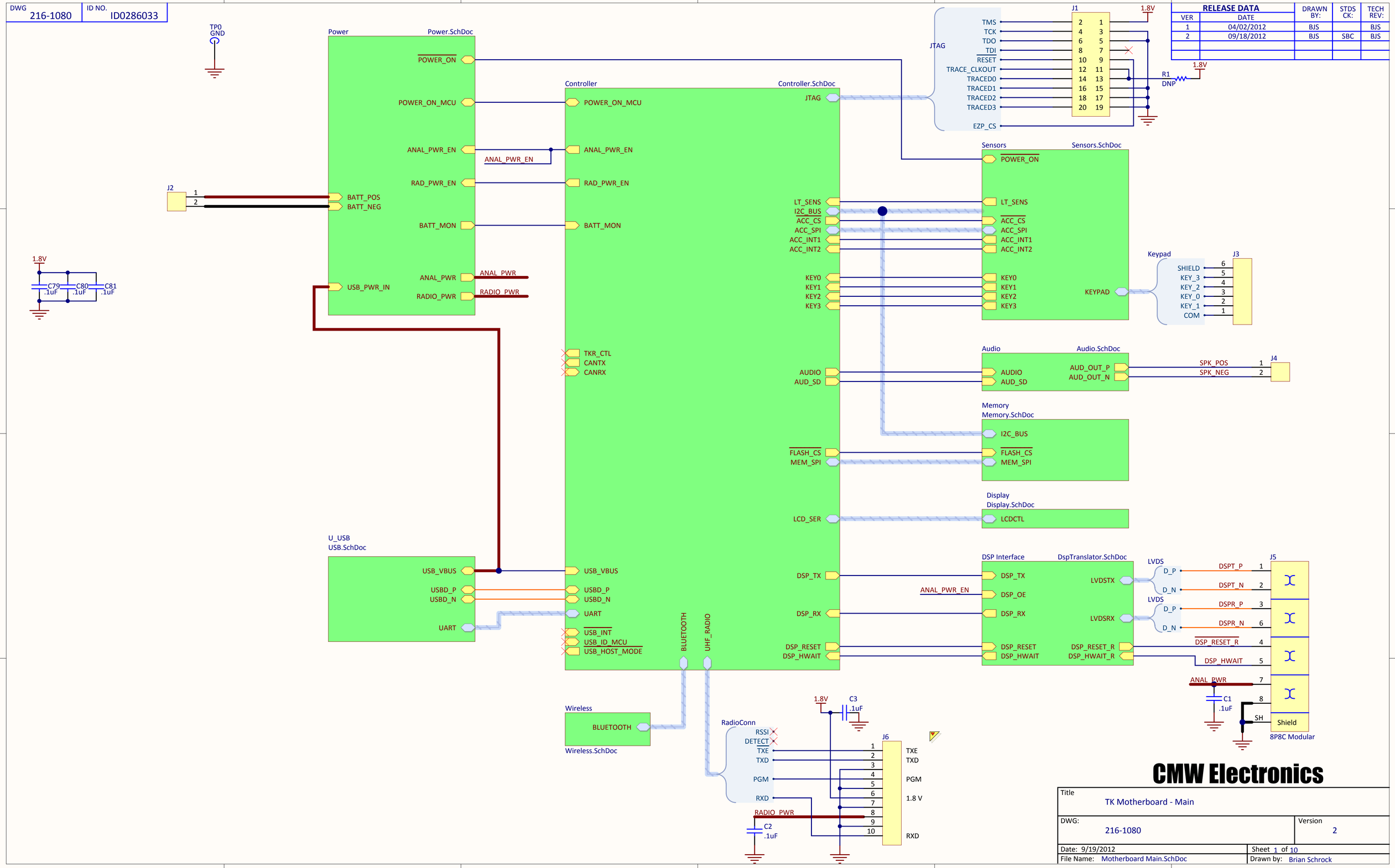

CMW Electronics

Title	
TK Motherboard - Main	
DWG: 216-1080	Version 2
Date: 9/19/2012	Sheet 1 of 10
File Name: Motherboard Main.SchDoc	Drawn by: Brian Schrock

DWG	ID NO.
216-1080	ID0286033

RELEASE DATA		DRAWN BY:	STDS CK:	TECH REV:
VER	DATE			
	SEE PAGE 1			

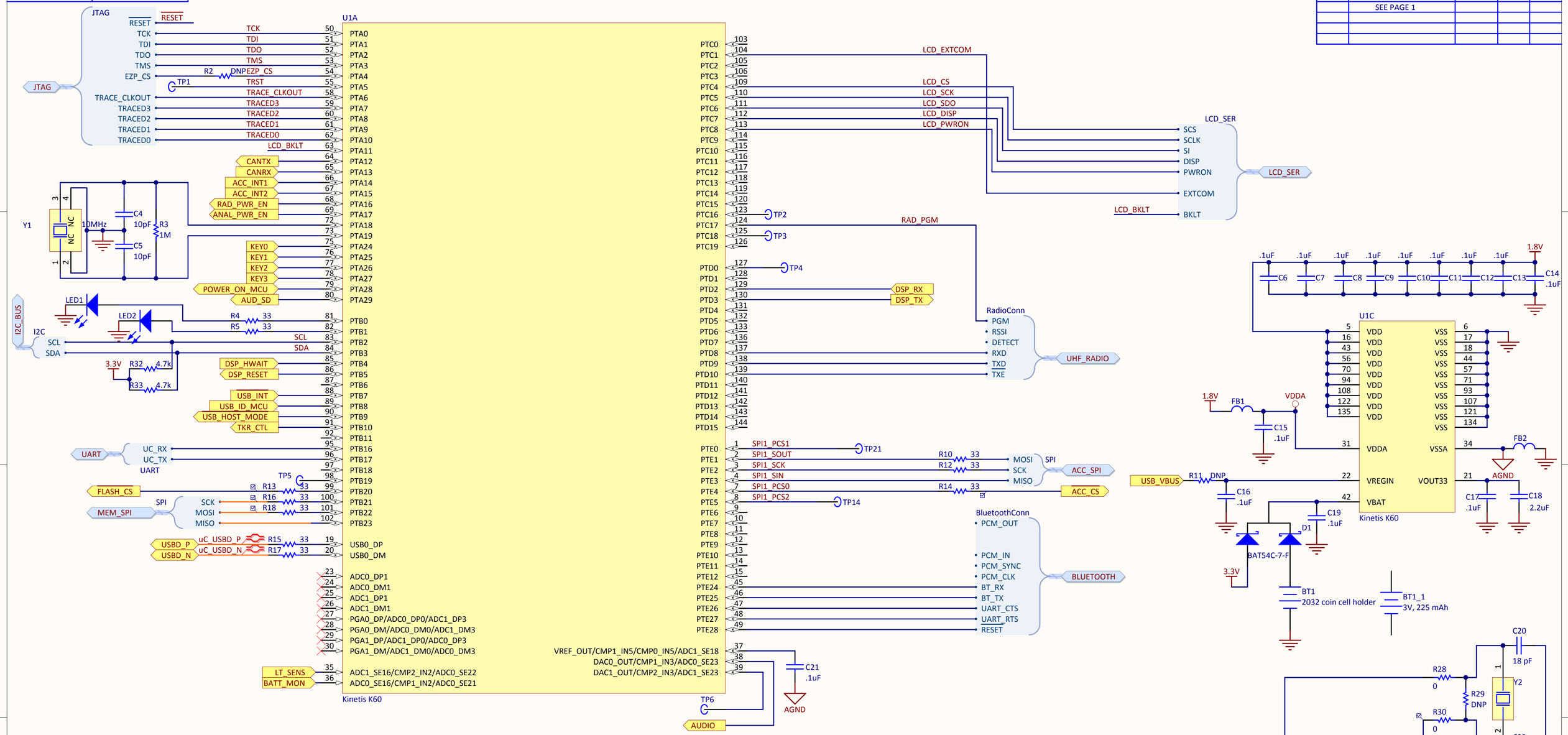

CMW Electronics

Title	
TK Motherboard - Controller	
DWG: 216-1080	Version 2
Date: 9/19/2012	Sheet 2 of 10
File Name: Controller.SchDoc	Drawn by: Brian Schrock

DWG	ID NO.
216-1080	ID0286033

RELEASE DATA		DRAWN BY:	STDS CK:	TECH REV:
VER	DATE			
	SEE PAGE 1			

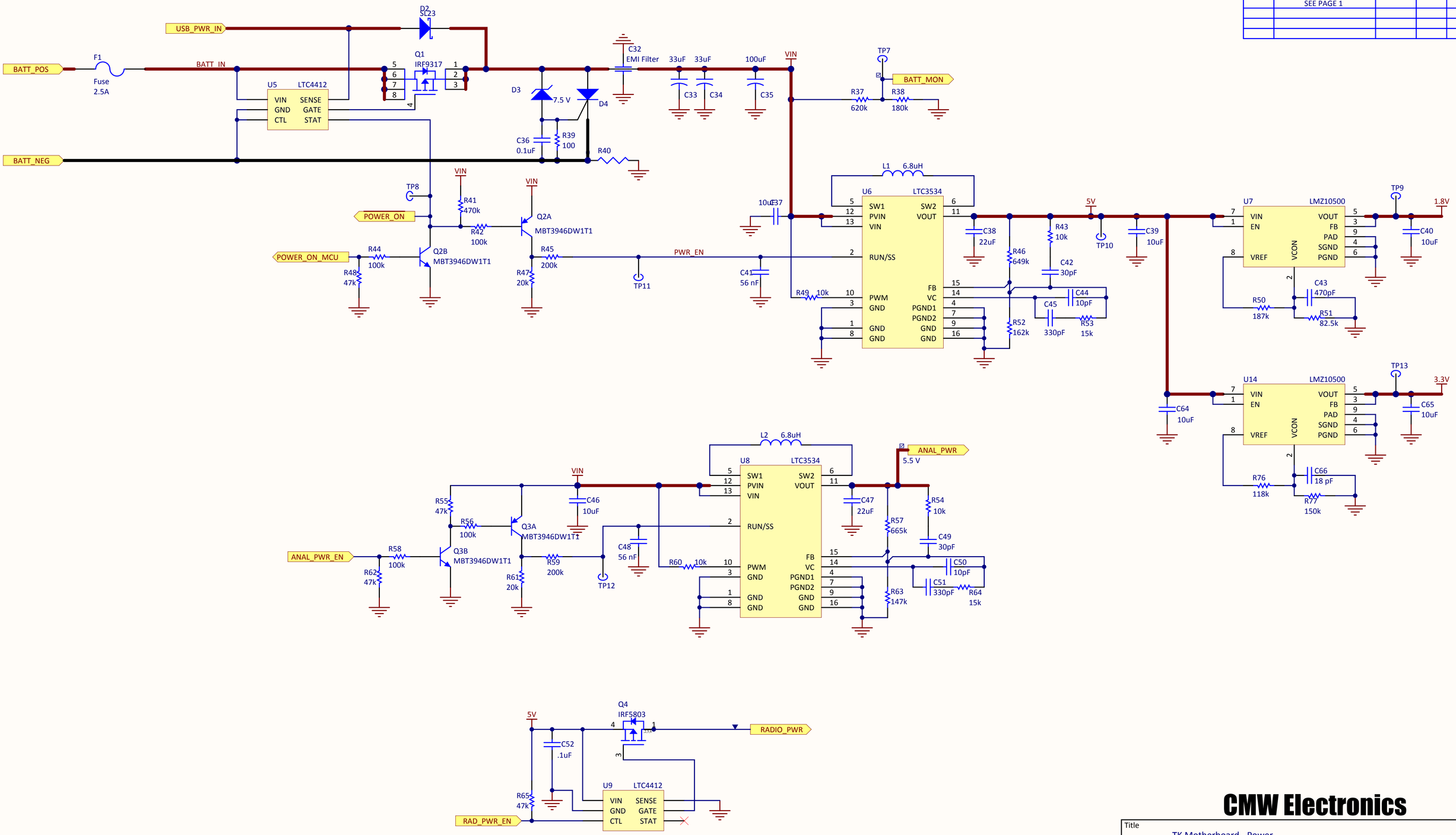

CMW Electronics

Title	
TK Motherboard - Power	
DWG: 216-1080	Version 2
Date: 9/19/2012	Sheet 3 of 10
File Name: Power.SchDoc	Drawn by: Brian Schrock

DWG	ID NO.
216-1080	ID0286033

RELEASE DATA		DRAWN BY:	STDS CK:	TECH REV:
VER	DATE			
	SEE PAGE 1			

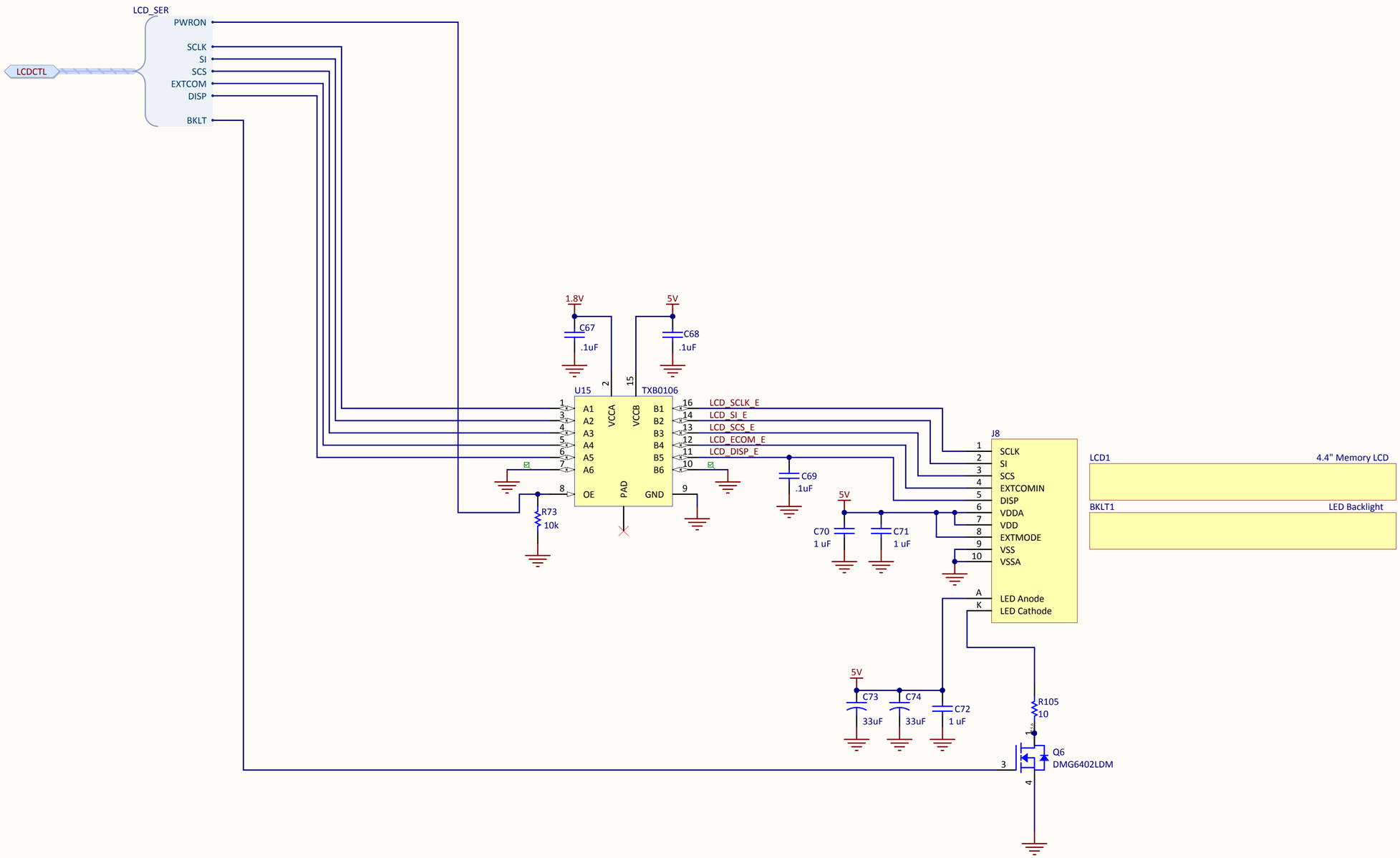

CMW Electronics

Title	
TK Motherboard - Display	
DWG: 216-1080	Version 2
Date: 9/19/2012	Sheet 4 of 10
File Name: Display.SchDoc	Drawn by: Brian Schrock

DWG	ID NO.
216-1080	ID0286033

RELEASE DATA		DRAWN BY:	STDS CK:	TECH REV:
VER	DATE			
	SEE PAGE 1			

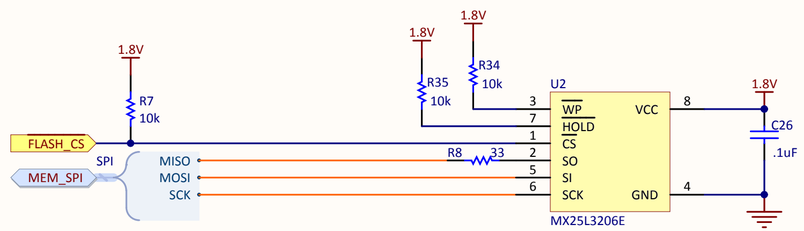

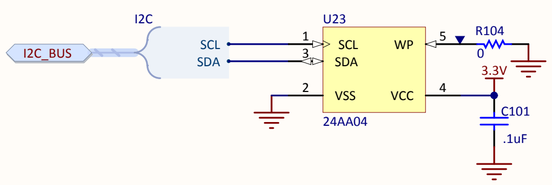

CMW Electronics

Title	TK Motherboard - Memory
DWG: 216-1080	Version 2
Date: 9/19/2012	Sheet 5 of 10
File Name: Memory.SchDoc	Drawn by: Brian Schrock

DWG	ID NO.
216-1080	ID0286033

RELEASE DATA		DRAWN BY:	STDS CK:	TECH REV:
VER	DATE			
	SEE PAGE 1			

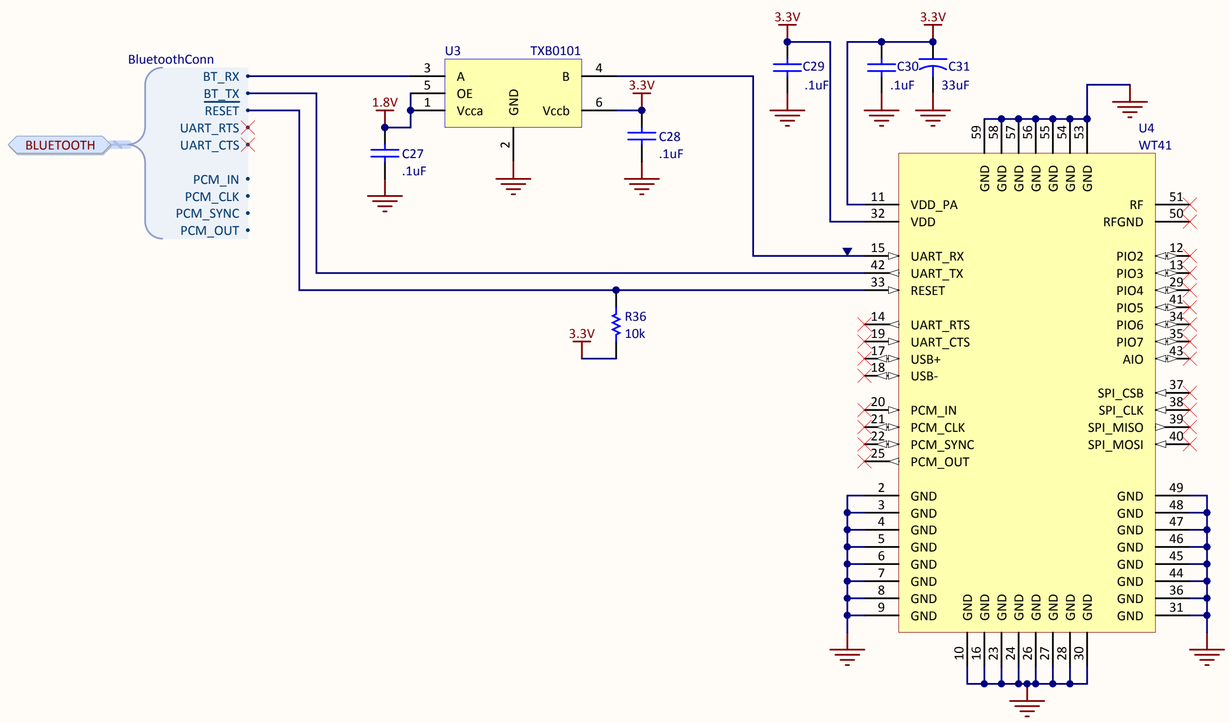

CMW Electronics

Title	
TK Motherboard - Wireless	
DWG: 216-1080	Version 2
Date: 9/19/2012	Sheet 6 of 10
File Name: Wireless.SchDoc	Drawn by: Brian Schrock

DWG	ID NO.
216-1080	ID0286033

RELEASE DATA		DRAWN BY:	STDS CK:	TECH REV:
VER	DATE			
	SEE PAGE 1			

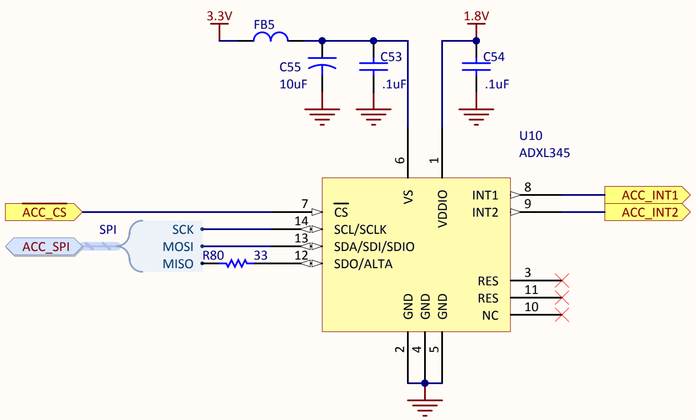

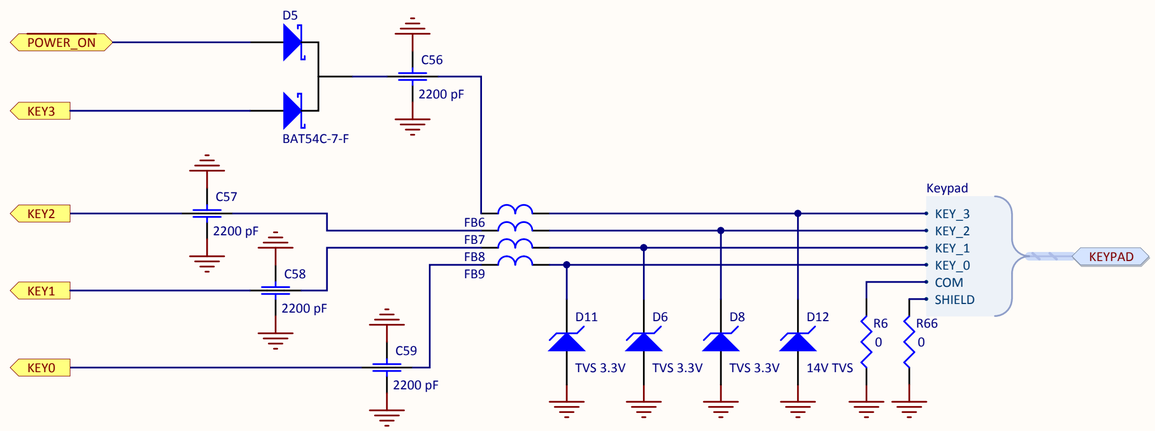

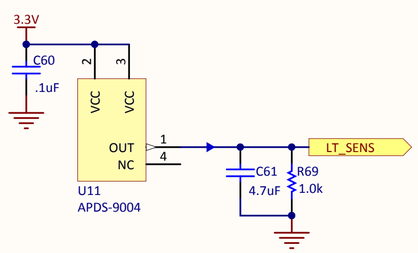

CMW Electronics

Title: TK Motherboard - Sensors	
DWG: 216-1080	Version: 2
Date: 9/19/2012	Sheet 7 of 10
File Name: Sensors.SchDoc	Drawn by: Brian Schrock

DWG	ID NO.
216-1080	ID0286033

RELEASE DATA		DRAWN BY:	STDS CK:	TECH REV:
VER	DATE			
	SEE PAGE 1			

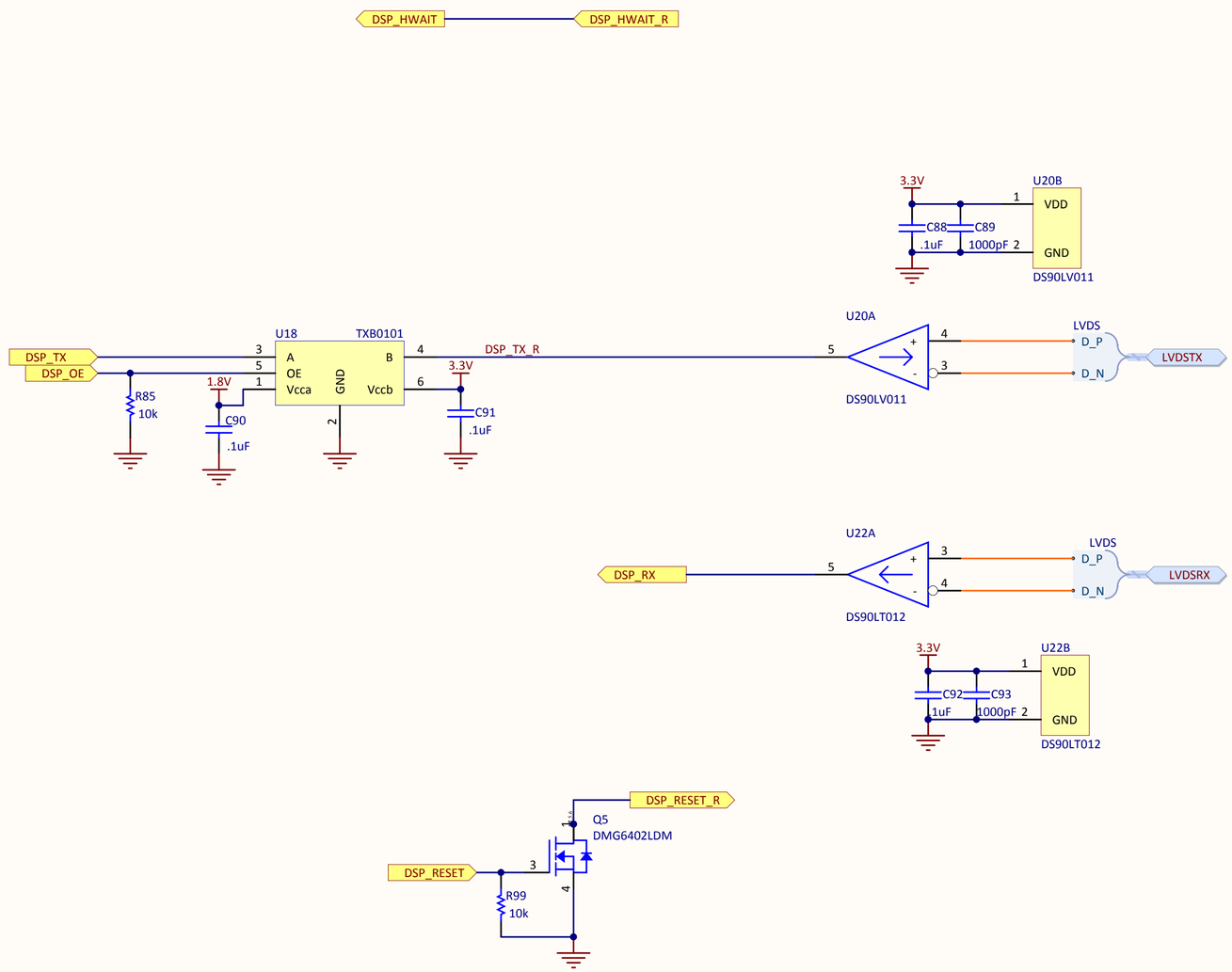

CMW Electronics

Title	
TK Motherboard - DSP Interface	
DWG: 216-1080	Version 2
Date: 9/19/2012	Sheet 8 of 10
File Name: DspTranslator.SchDoc	Drawn by: Brian Schrock

DWG	ID NO.
216-1080	ID0286033

RELEASE DATA		DRAWN BY:	STDS CK:	TECH REV:
VER	DATE			
	SEE PAGE 1			

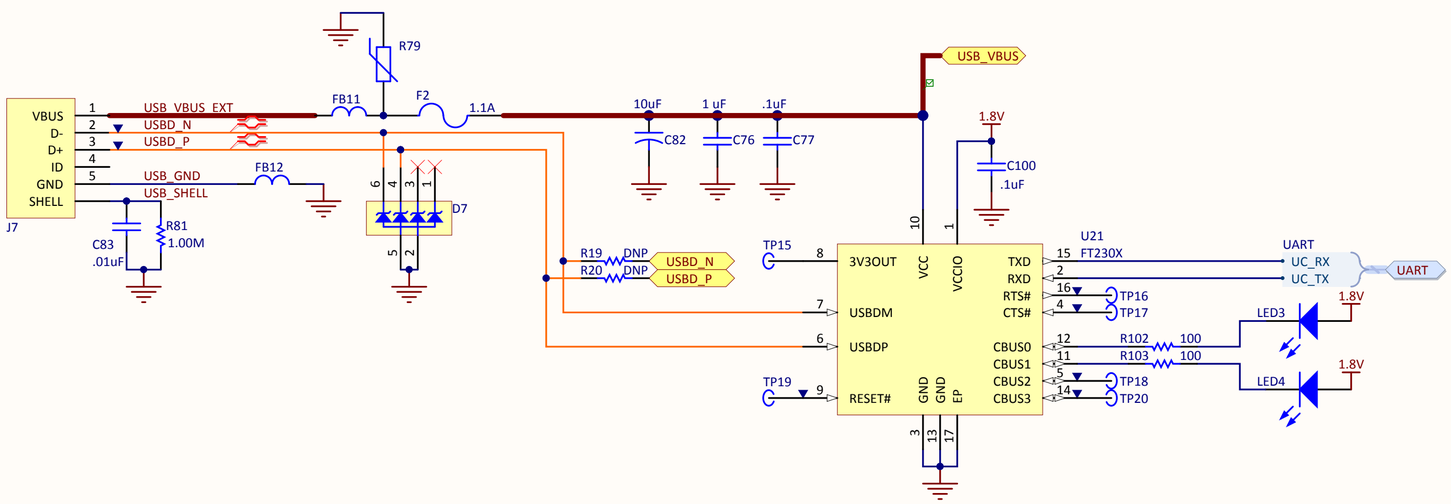

Ditch Witch ® Subsite ®

Title	TK Motherboard - USB Interface
DWG: 216-1080	Version 2
Date: 9/19/2012	Sheet 9 of 10
File Name: USB.SchDoc	Drawn by: Drafter

DWG	ID NO.
216-1080	ID0286033

RELEASE DATA		DRAWN BY:	STDS CK:	TECH REV:
VER	DATE			
	SEE PAGE 1			

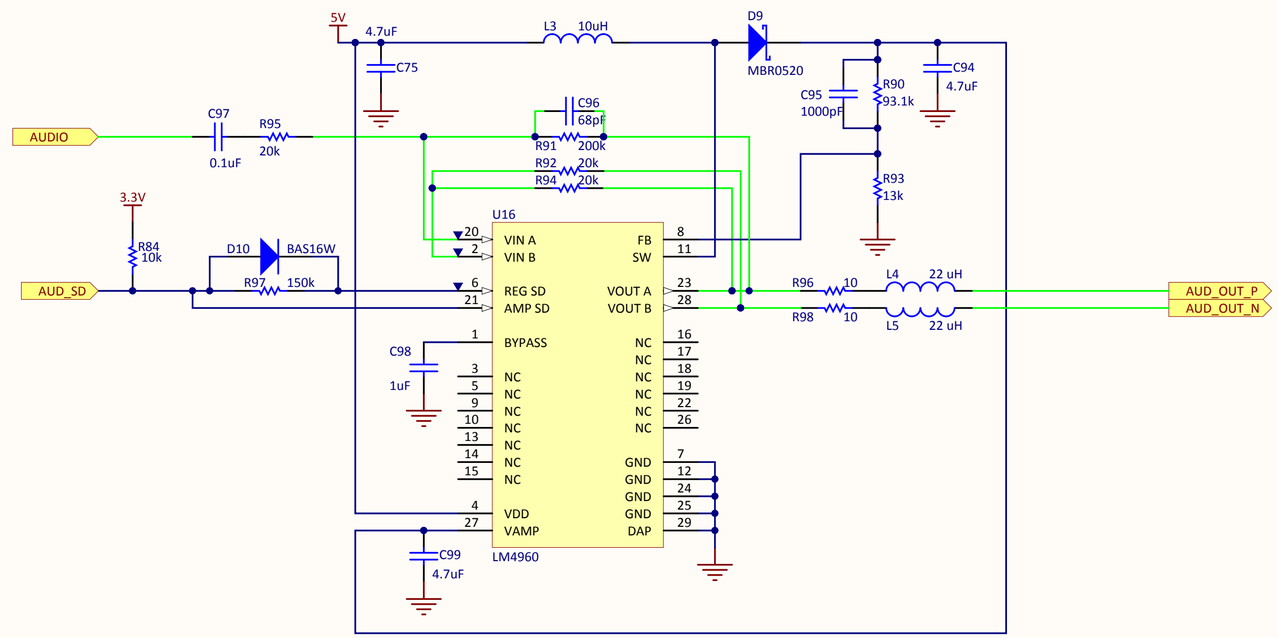

CMW Electronics

Title	
TK Motherboard - Audio	
DWG: 216-1080	Version 2
Date: 9/19/2012	Sheet 10 of 10
File Name: Audio.SchDoc	Drawn by: Brian Schrock