DE'LONGHI MICROWAVE OVEN

WIRING SCHEMATIC - type MW 660 FU 120VAC, 60 Hz

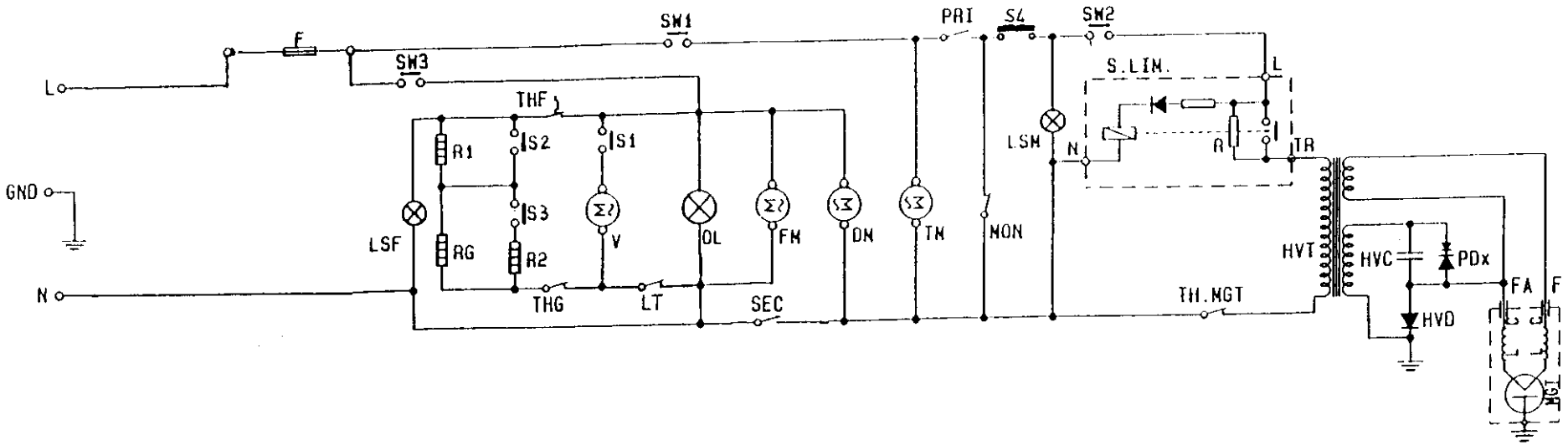

OL OVEN LAMP

F. FUSE 8A EM OR EF

TM TIMER MOTOR

THF OVEN THERMOSTAT

S 1-2-3-4 SELECTOR SWITCH

R1,R2. FAN HEATER ELEMENTS

S.LIM. CURRENT LIMITER PCB

LSM MICROWAVE CONTROL LIGHT

SW1. TIMER CONTACT SWITCH

PRI . MONITORED INT'LOCK SWITCH

MON. MONITOR INT'LOCK SWITCH

SEC . SECUNDARY INT'LOCK SWITCH

V. CONVECTION FAN MOTOR

FM . COOLING FAN MOTOR

DM : TURNTABLE MOTOR

RG : GRILL HEATING ELEMENT

LSF OVEN CONTROL LIGHT

SW2. POWER CONTACT SWITCH

TH.MGT MAGNETRON CUT OUT

MGT. MAGNETRON

HVT. HIGH VOLTAGE TRANSFORMER

HVC. HIGH VOLTAGE CAPACITOR

HVD HIGH VOLTAGE DIODE

PDx . PROTECTION DIODE

THG . GRILL THERMOSTAT

LT OVEN LIMITING THERMOSTAT

SW3 . MANUAL CONTACT SWITCH

DOOR . OPEN

TIMER OFF