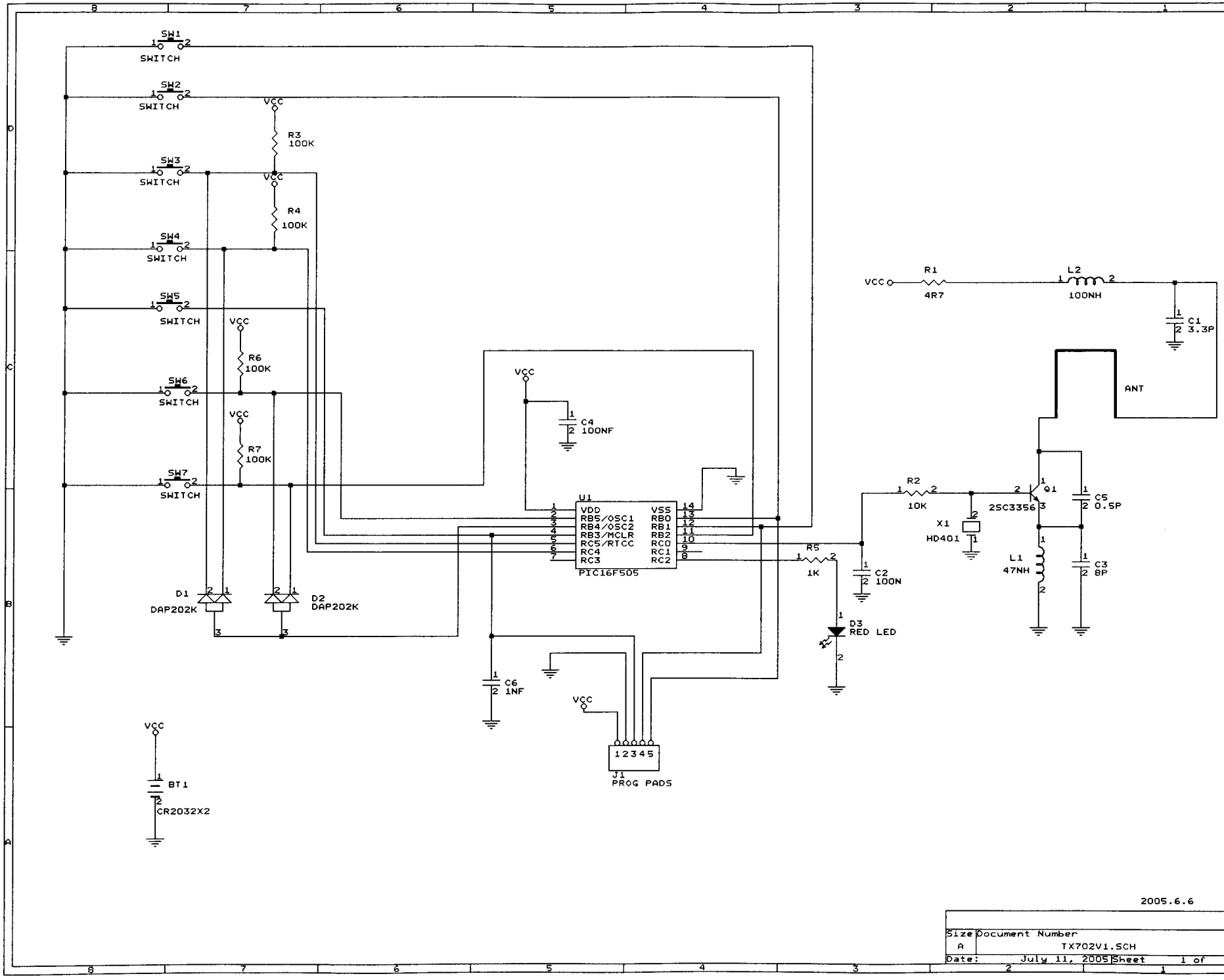
SW1
SWITCH
SW2
SWITCH
SW3
SWITCH
SW4
SWITCH
SW5
SWITCH
SW6
SWITCH
SW7
SWITCH
VCC
R3
100K
R4
100K
R6
100K
R7
100K
D1
DAP202K
D2
DAP202K
U1
VDD
RB5/OSC1
RB4/OSC2
RB3/MCLR
RC5/RTCC
RC4
RC3
VSS
RB0
RB1
RB2
RC0
RC1
RC2
PIC16F505
C4
100NF
C6
1NF
J1
PROG PADS
BT1
CR2032X2
R1
4R7
L2
100NH
C1
3.3P
ANT
R2
10K
X1
HD401
Q1
2SC3356
C5
0.5P
L1
47NH
C3
8P
R5
1K
C2
100N
D3
RED LED
2005.6.6
Size
A
Document Number
TX702V1.SCH
Date:
July 11, 2005
Sheet
1 of