PP-243 RECEIVER – FREQUENCY 49.86MHz

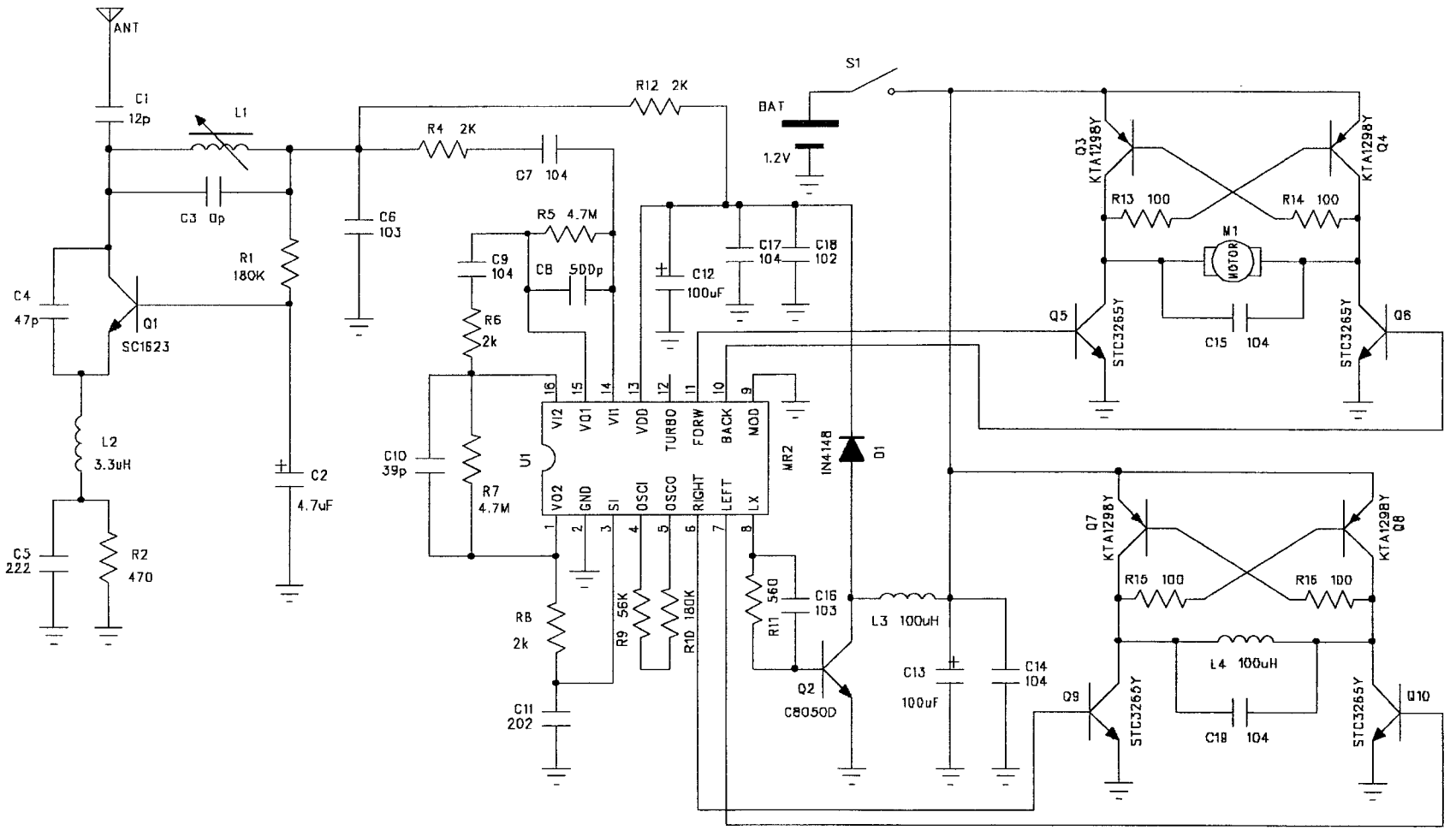

KIDDESIGNS INC.