Notes:
1. The length of the cable shall be 48" +/- 1".

2. Cable shall be 3 core, 26 AWG, stranded with shield.

3. The cable capacitance shall be less than 20pF/ft wire to shield.

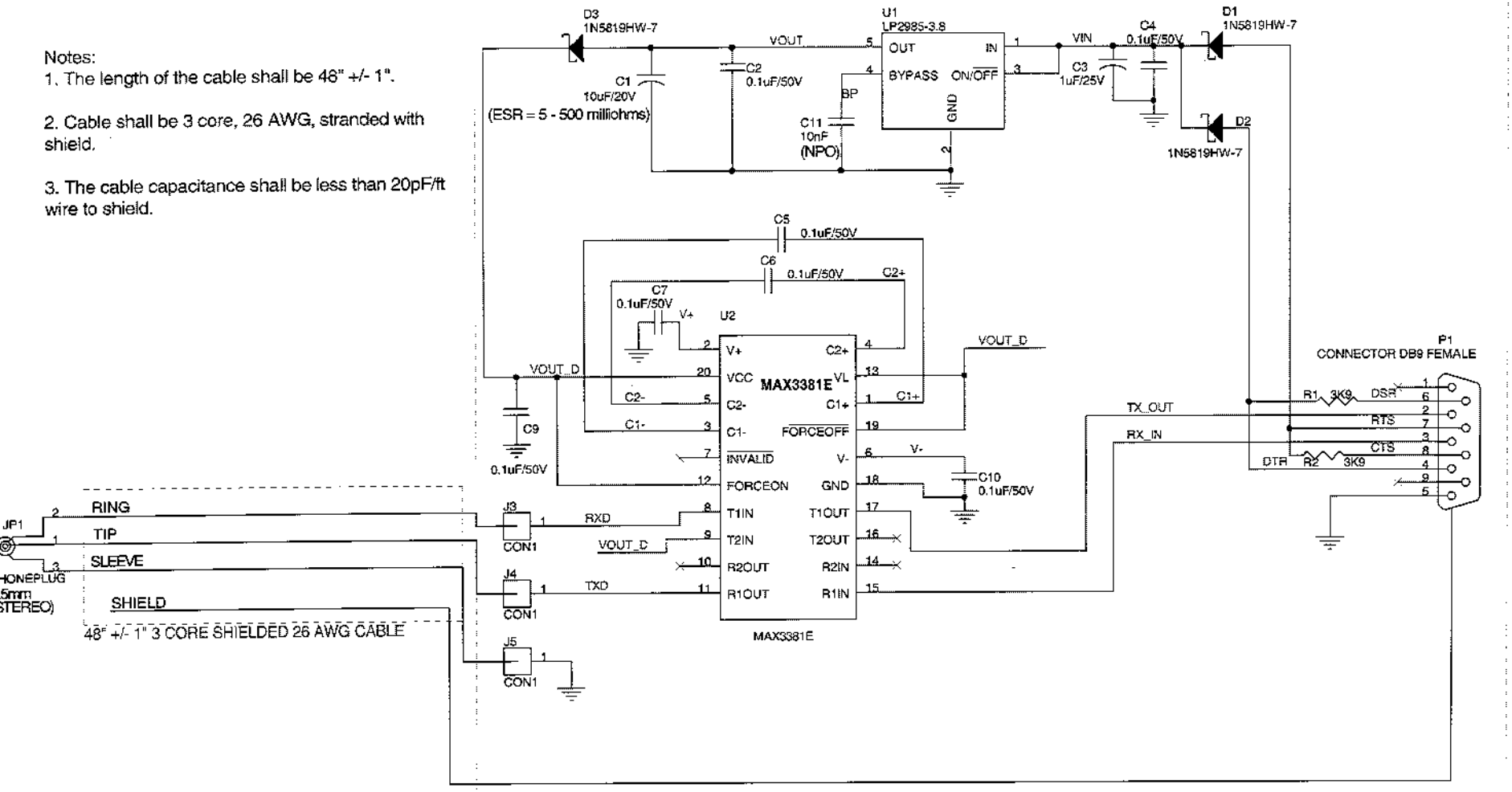


**PCB LOGIC**

Doc ID: HCLPLFS001_SCH_002

Proprietary Information: This document and the contents hereof are considered proprietary and confidential information of M/s.LifeScan Inc. and disclosure to unauthorized individuals or dissemination, publication or copying is prohibited without prior written consent by M/s.LifeScan Inc.

| Designed by: | EXTERNAL REVIEWER (Client) | DEPT. | APPROVAL | DATE | INTERNAL REVIEWER | SIGN | DATE |
|---|---|---|---|---|---|---|---|
| HCL | Pinaki Ray | | | | DRAWN G.BALAKRISHNAN | | |
| | Curt Eyster | | | | REVIEWED S.T.MARBAN | | |
| CAD SOFTWARE: | Hamid Nabizadeh | | | | QC CHECK R.SHEYAMALA | | |
| OrCAD V9.2 | | | | | IV & V R.BALAMURUGAN | | |

LIFESCAN
a Johnson & Johnson company

Title: Lifescan 9-Pin Cable

Doc Name: Serial Communication Interface

Rev: A

Size: B | SHEET 2 OF 2