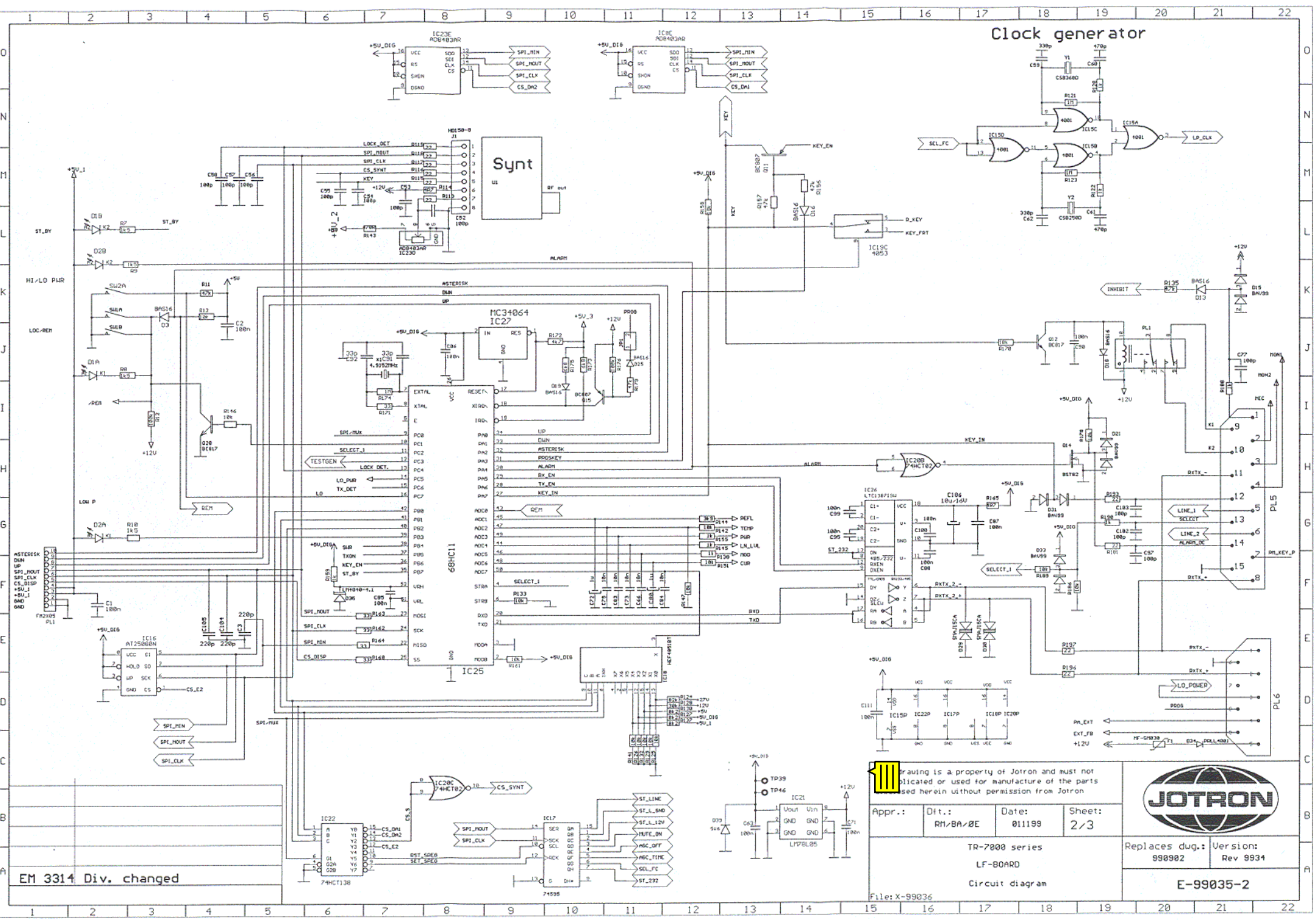
Clock generator
Synt
MC34064
IC27
68HC11
IC25
IC23E
AD8403AR
IC8E
AD8403AR
IC23D
AD8403AR
IC16
AT25080N
IC22
74HCT138
IC7
74595
IC21
LM78L05
IC26
LTC1387ISW
IC20B
74HCT02
IC20C
74HCT02
IC19C
4053
PL1
FM2X05
PL5
PL6
EM 3314 Div. changed
Drawing is a property of Jotron and must not be copied or used for manufacture of the parts used herein without permission from Jotron
Appr.:
Dit.:
RM/BA/ØE
Date:
011199
Sheet:
2/3
TR-7000 series
LF-BOARD
Circuit diagram
File: X-99036
JOTRON
Replaces dug.:
990902
Version:
Rev 9934
E-99035-2