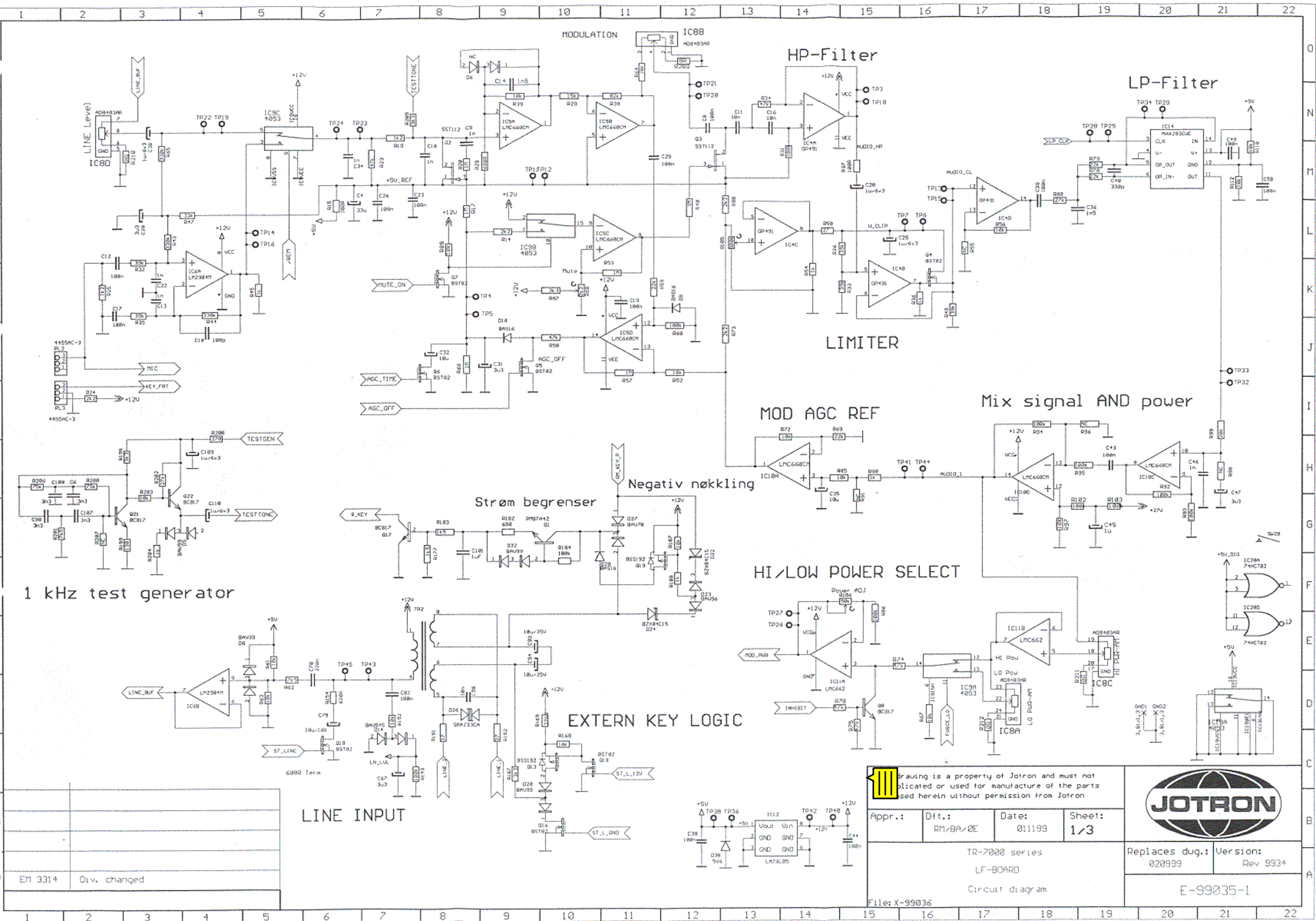

EM 3314	Div. changed

Drawing is a property of Jotron and must not be copied or used for manufacture of the parts shown herein without permission from Jotron

Appr.:	Dft.:	Date:	Sheet:
	RM/BA/ØE	011199	1/3

JOTRON

TR-7000 series

LF-BOARD

Circuit diagram

File: X-99036

Replaces dug.:	Version:
020999	Rev 9934

E-99035-1