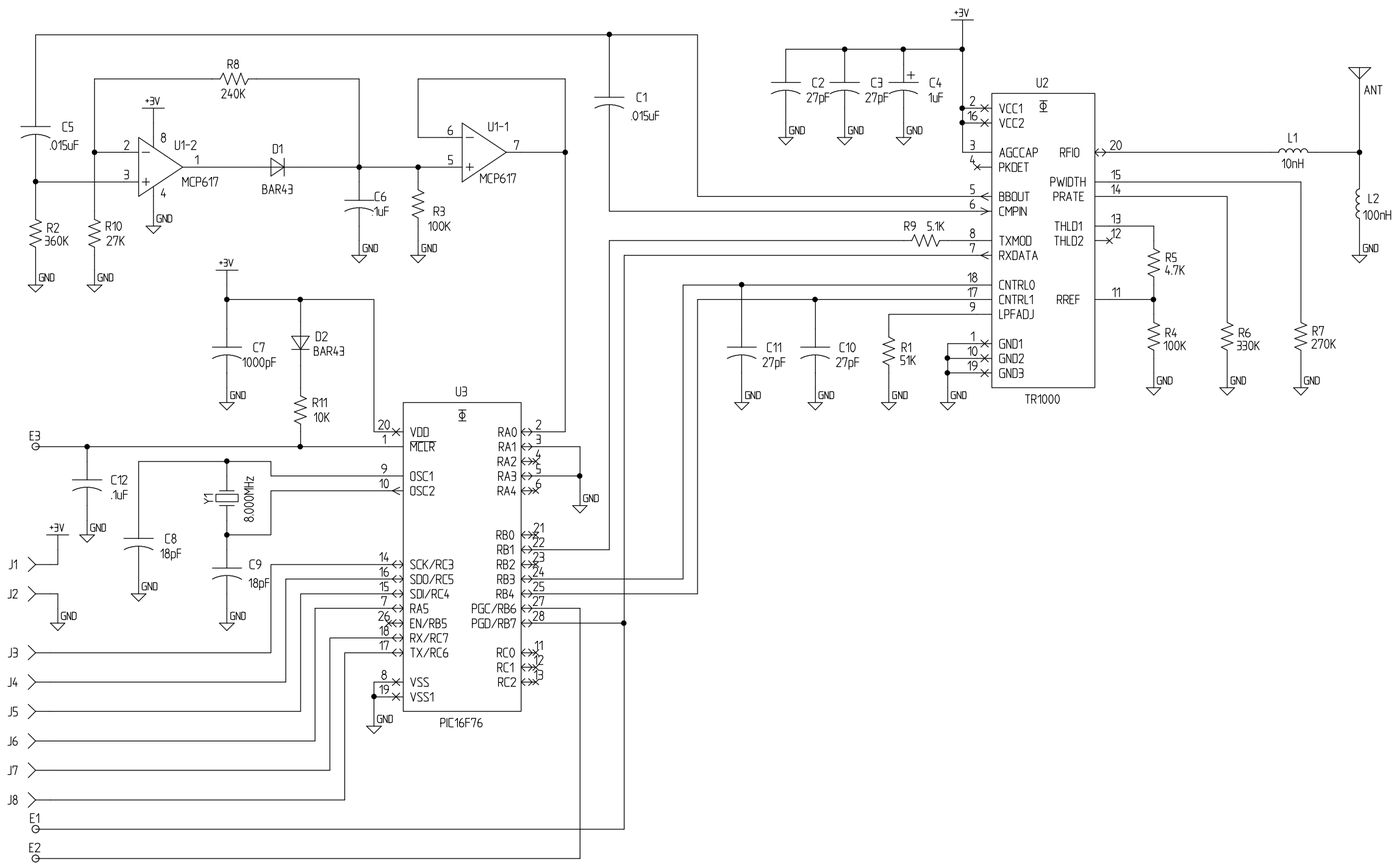

NOT RELEASED

REV	DATE	E.O.	REV	DATE	E.O.
X	XX-XX-02	02-XXXX			

DIMENSIONS & TOLERANCES PER ANSI Y14.5M-1994 & HBC ENGINEERING STANDARDS

MAT'L SPEC.

FUNCTIONAL DIMENSIONING:
ALL DIMENSIONED AND UNDIMENSIONED GEOMETRY AND TOLERANCING ON THIS DRAWING IS DEFINED AND CONTROLLED BY THE DATABASE FILE KEY. INFORMATION IS REPRESENTED BY THIS DRAWING CONTAINING FUNCTIONAL DIMENSIONS.
CONTROLLED BY DATABASE FILE.

FIRST USED ON T8665

DIMENSIONS ARE IN: ☒ INCHES ☐ MILLIMETERS

THIRD ANGLE PROJECTION

DRAFT CALLOUTS
INDICATES DECREASING DIMENSION
INDICATES INCREASING DIMENSION

-TOLERANCE UNLESS NOTED-

MACHINED ∠ S ±5° FORMED ∠ S ±3°

MILLIMETERS		INCHES	
OVER	INCLUDING		
0 TO 6	±0.1	.0	±.02
6 TO 30	±0.2	.00	±.01
30 TO 100	±0.3	.000	±.010
100 TO 300	±0.5		
300 TO 1000	±0.8		

DWN. T BONA 10-9-02
DES. X.XXXXX
NEXT ASS'Y X.XXXXX
REFERENCE X.XXXXX
DEV. NO. X.XXXXX
SIZE D

Honeywell
HOME AND BUILDING CONTROL
GOLDEN VALLEY, MN

NAME SCHEMATIC -DM1000
DRAWING NO. 32006012 REV 9
SCALE Sheet 2

INTEGRA 3.5I
ARCHIVE REF NO. 32006XX1