To: Lany Lee.
Fax: 陈国生.

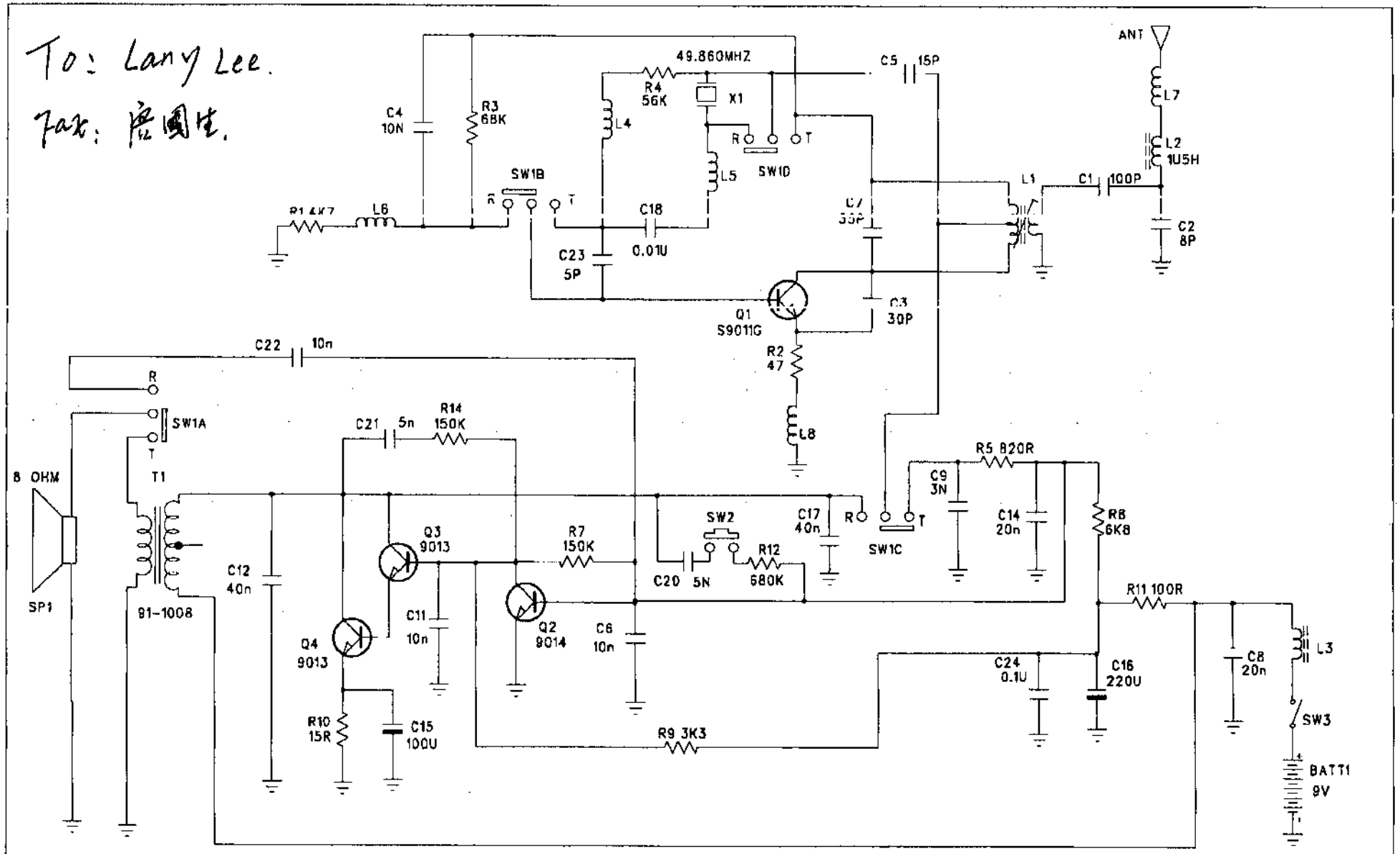

SCHEMATIC DIAGRAM	SHEET 1 OF 1
TITLE :WALKIE TALKIE	
MODEL NUMBER :9393	SIZE A4
DATE :1/6/2K	VER. : 1.0
GOLDMEN ELECTRONIC CO., LTD.	