SAR
TEST REPORT

Product : **802.11n 1x1 PCIe Minicard transceiver**

Model(s): **AR5B95**

Applicant: **Acer Inc.**

Address: **8F, 88, Sec. 1, Hsin Tai Wu Rd.,**
Hsichih, Taipei Hsien 221
Taiwan, R. O. C.

Test Performed by:

International Standards Laboratory

<Lung-Tan LAB>
*Site Registration No.
BSMI: SL2-IN-E-0013; TAF: 0997; IC: IC4067B-1;
VCCI: R-1435, C-1440, T-1676, G-17, R-2598, C-2845, T-1464, G-16
NEMKO: ELA 113B
*Address:
No. 120, Lane 180, San Ho Tsuen, Hsin Ho Rd.
Lung-Tan Hsiang, Tao Yuan County 325, Taiwan
*Tel : 886-3-407-1718; Fax: 886-3-407-1738

Report No.: **ISL-10LR014SAR-F**
Issue Date : **2010/05/12**

Contents of Report

1. General 1
1.1 Certification of Accuracy of Test Data 1
2. Description of Equipment Under Test (EUT) 2
2.1 Test Environment 2
3. SAR Measurement System 3
3.1 ALSAS-10U System Description 3
3.1.1 Applications 3
3.1.2 Area Scans 3
3.1.3 Zoom Scan (Cube Scan Averaging) 4
3.1.4 ALSAS-10U Interpolation and Extrapolation Uncertainty 4
3.2 Isotropic E-Field Probe 5
3.2.1 Isotropic E-Field Probe Specification 6
3.3 Boundary Detection Unit and Probe Mounting Device 6
3.4 Daq-Paq (Analog to Digital Electronics) 7
3.5 Axis Articulated Robot 7
3.6 ALSAS Universal Workstation 8
3.7 Universal Device Positioner 8
3.8 Phantom Types 9
3.8.1 APREL Laboratories Universal Phantom 9
4. Tissue Simulating Liquid 10
4.1 The composition of the tissue simulating liquid 10
4.2 Tissue Calibration Result 10
4.3 Tissue Dielectric Parameters for Head and Body Phantoms 11
5. SAR Measurement Procedure 12
5.1 SAR System Validation 12
5.1.1 Validation Dipoles 12
5.1.2 Validation Result 13
5.2 Arrangement Assessment Setup 14
5.2.1 Test Positions of Device Relative to Head 14
5.2.2 Definition of the “Cheek” Position 14
5.2.3 Definition of the “Tilted” Position 16
5.2.4 Test Positions for body-worn 16
5.3 SAR Measurement Procedure 17
6. SAR Exposure Limits 18
7. Test Equipment List 19
8. Measurement Uncertainty 20
9. Test Result Summary 21
9.1 802.11b Test Result 21
9.2 802.11g Test Result 21
9.3 802.11n HT20 Test Result 21
9.4 802.11n HT40 Test Result 22
10. Appendix A: Photographs of Test Setup 23
11. Appendix B: Photographs of EUT (refer to ISL-10LR014P) 23
12. Appendix C: SAR System Validation Data 23
13. Appendix D: SAR Measurement Data 23
14. Appendix E: Probe Calibration Data 23
15. Appendix F: Dipole Calibration Data 23

1. General

1.1 Certification of Accuracy of Test Data

Standards:	**FCC Oet65 Supplement C June 2001** **IEEE Std. 1528-2003** **47CFR § 2.1093** **RSS102**
Equipment Tested:	802.11n 1x1 PCIe Minicard transceiver
Model:	AR5B95
Applied by	Acer Inc.
Sample received Date:	2010/04/20
Final test Date :	refer to the date of test data
Report Engineer:	Daphne Liu
Test Site:	SAR test site
Test Summary	**Body Maximum SAR Measurement (1g)** 802.11b : 0.042 W/kg 802.11g : 0.022 W/kg 802.11n HT20 : 0.037 W/kg 802.11n HT40 : 0.026 W/kg

Test Engineer:

Holly Chang

Holly Chang

All the tests in this report have been performed and recorded in accordance with the standards described above and performed by an independent test lab, International Standards Laboratory. The test results contained in this report accurately represent the measurements of the characteristics and the energy generated by sample equipment under test at the time of the test. The sample equipment tested as described in this report is in compliance with the limits of above standards.

Approve & Signature

Jim Chu

Jim Chu/ Director

Test results given in this report apply only to the specific sample(s) tested under stated test conditions. This report shall not be reproduced other than in full without the explicit written consent of ISL. This report totally contains 25 pages, including 1 cover page , 1 contents page, and 23 pages for the test description.

2. Description of Equipment Under Test (EUT)

Product Name	802.11n 1x1 PCIe Minicard transceiver
Model No.	AR5B95
FCC ID:	HLZ-AR5B95
IC:	1754F- AR5B95
TX Frequency	2450MHz
Type of Modulation	802.11b:DBPSK(1Mbps),DQPSK(2Mbps),CCK(5.5/11Mbps) 802.11g:OFDM (6M - 54Mbps) Draft 802.11n:BPSK, QPSK, 16-QAM, 64-QAM
Max. Output Power (Conducted)	802.11b : 2462MHz ,21.13dBm 802.11g : 2437MHz ,25.22dBm 802.11n HT20 : 2437MHz ,25.27dBm 802.11n HT40 : 2437MHz ,21.94dBm
Antenna Peak Gain	Main Antenna : 2.39 dBi Aux Antenna : -0.53 dBi
Power Type	Notebook PC Battery
Antenna Type	Internal
Device Category	Portable
RF Exposure Environment	Uncontrolled

The EUT was installed to a Notebook Computer .
The Notebook have several models and brands for marketing demands as listed below, and all models have built the transmitted antenna (WLAN Antenna) and RF module in the same positions.

Model	Brand
ZH9	ACER
AO521	ACER
ZH9A	Gateway
LT22	Gateway
ZH9B	Packard Bell
dot S	Packard Bell

2.1 Test Environment

Ambient conditions of test site:

Item	Required	Actual
Temperature (°C)	18-25	22.5
Humidity (%RH)	30-70	60

3. SAR Measurement System

3.1 ALSAS-10U System Description

ALSAS-10-U is fully compliant with the technical and scientific requirements of IEEE 1528, IEC 62209, CENELEC, ARIB, ACA, and the Federal Communications Commission. The system comprises of a six axes articulated robot which utilizes a dedicated controller.

ALSAS-10U uses the latest methodologies and FDTD odeling to provide a platform which is repeatable with minimum uncertainty.

3.1.1 Applications

Predefined measurement procedures compliant with the guidelines of CENELEC, IEEE, IEC, FCC, etc are utilized during the assessment for the device. Automatic detection for all SAR maxima are embedded within the core architecture for the system, ensuring that peak locations used for centering the zoom scan are within a 1mm resolution and a 0.05mm repeatable position. System operation range currently available up-to 6 GHz in simulated tissue.

3.1.2 Area Scans

Area scans are defined prior to the measurement process being executed with a user defined variable spacing between each measurement point (integral) allowing low uncertainty measurements to be conducted. Scans defined for FCC applications utilize a $10mm^2$ step integral, with 1mm interpolation used to locate the peak SAR area used for zoom scan assessments.

Where the system identifies multiple SAR peaks (which are within 25% of peak value) the system will provide the user with the option of assessing each peak location individually for zoom scan averaging.

3.1.3 Zoom Scan (Cube Scan Averaging)

The averaging zoom scan volume utilized in the ALSAS-10U software is in the shape of a cube and the side dimension of a 1 g or 10 g mass is dependent on the density of the liquid representing the simulated tissue. A density of 1000 kg/m³ is used to represent the head and body tissue density and not the phantom liquid density, in order to be consistent with the definition of the liquid dielectric properties, i.e. the side length of the 1 g cube is 10mm, with the side length of the 10 g cube 21,5mm.

When the cube intersects with the surface of the phantom, it is oriented so that 3 vertices touch the surface of the shell or the center of a face is tangent to the surface. The face of the cube closest to the surface is modified in order to conform to the tangent surface.

The zoom scan integer steps can be user defined so as to reduce uncertainty, but normal practice for typical test applications (including FCC) utilize a physical step of 5x5x8 (8mmx8mmx5mm) providing a volume of 32mm in the X & Y axis, and 35mm in the Z axis.

3.1.4 ALSAS-10U Interpolation and Extrapolation Uncertainty

The overall uncertainty for the methodology and algorithms the used during the SAR calculation was evaluated using the data from IEEE 1528 based on the example f3 algorithm:

$$f_3(x,y,z) = A\,\frac{a^2}{\frac{a^2}{4} + x'^2 + y'^2}\cdot\left(e^{-\frac{2z}{a}} + \frac{a^2}{2(a+2z)^2}\right)$$

3.2 Isotropic E-Field Probe

The isotropic E-Field probe has been fully calibrated and assessed for isotropicity, and boundary effect within a controlled environment. Depending on the frequency for which the probe is calibrated the method utilized for calibration will change. A number of methods is used for calibrating probes, and these are outlined in the table below:

Calibration Frequency	Air Calibration	Tissue Calibration
835MHz	TEM Cell	Temperature
900MHz	TEM Cell	Temperature
1800MHz	TEM Cell	Temperature
1900MHz	TEM Cell	Temperature
2450MHz	Waveguide	Temperature
5200MHz	Waveguide	Temperature
5800MHz	Waveguide	Temperature

The E-Field probe utilizes a triangular sensor arrangement as detailed in the diagram below:

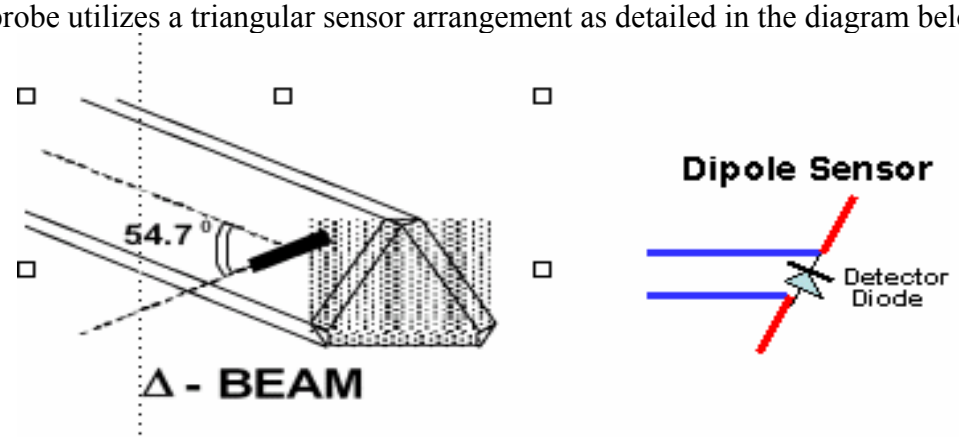

SAR is assessed with a calibrated probe which moves at a default height of 5mm from the center of the diode, which is mounted to the sensor, to the phantom surface (in the Z Axis). The 5mm offset height has been selected so as to minimize any resultant boundary effect due to the probe being in close proximity to the phantom surface.

The following algorithm is an example of the function used by the system for linearization of the output from the probe when measuring complex modulation schemes.

$$V_i = U_i + U_i^2 \cdot \frac{cf}{dcp_i}$$

3.2.1 Isotropic E-Field Probe Specification

Calibration in Air	Frequency Dependent Below 2GHz Calibration in air performed in a TEM Cell Above 2GHz Calibration in air performed in waveguide
Sensitivity	0.70 µV/(V/m)² to 0.85 µV/(V/m)²
Dynamic Range	0.0005 W/kg to 100W/kg
Isotropic Response	Better than 0.2dB
Diode Compression point (DCP)	Calibration for Specific Frequency
Probe Tip Radius	< 5mm
Sensor Offset	1.56 (+/- 0.02mm)
Probe Length	290mm
Video Bandwidth	@ 500 Hz: 1dB @1.02 KHz: 3dB
Boundary Effect	Less than 2% for distance greater than 2.4mm
Spatial Resolution	Diameter less than 5mm Compliant with Standards

3.3 Boundary Detection Unit and Probe Mounting Device

ALSAS-10U incorporates a boundary detection unit with a sensitivity of 0.05mm for detecting all types of surfaces. The robust design allows for detection during probe tilt (probe normalize) exercises, and utilizes a second stage emergency stop. The signal electronics are fed directly into the robot controller for high accuracy surface detection in lateral and axial detection modes (X, Y, & Z).

The probe is mounted directly onto the Boundary Detection unit for accurate tooling and displacement calculations controlled by the robot kinematics. The probe is connect to an isolated probe interconnect where the output stage of the probe is fed directly into the amplifier stage of the Daq-Paq.

3.4 Daq-Paq (Analog to Digital Electronics)

ALSAS-10U incorporates a fully calibrated Daq-Paq (analog to digital conversion system) which has a 4 channel input stage, sent via a 2 stage auto-set amplifier module. The input signal is amplified accordingly so as to offer a dynamic range from 5µV to 800mV. Integration of the fields measured is carried out at board level utilizing a Co-Processor which then sends the measured fields down into the main computational module in digitized form via an RS232 communications port. Probe linearity and duty cycle compensation is carried out within the main Daq-Paq module.

ADC	12 Bit
Amplifier Range	20mV to 200mV and 150mV to 800mV
Field Integration	Local Co-Processor utilizing proprietary integration algorithms
Number of Input Channels	4 in total 3 dedicated and 1 spare
Communication	Packet data via RS232

3.5 Axis Articulated Robot

ALSAS-10U utilizes a six axis articulated robot, which is controlled using a Pentium based real-time movement controller. The movement kinematics engine utilizes proprietary (Thermo CRS) interpolation and extrapolation algorithms, which allow full freedom of movement for each of the six joints within the working envelope. Utilization of joint 6 allows for full probe rotation with a tolerance better than 0.05mm around the central axis.

Robot/Controller Manufacturer	Thermo CRS
Number of Axis	Six independently controlled axis
Positioning Repeatability	0.05mm
Controller Type	Single phase Pentium based C500C
Robot Reach	710mm
Communication	RS232 and LAN compatible

3.6 ALSAS Universal Workstation

ALSAS Universal workstation allows for repeatability and fast adaptability. It allows users to do calibration, testing and measurements using different types of phantoms with one set up, which significantly speeds up the measurement process.

3.7 Universal Device Positioner

The universal device positioner allows complete freedom of movement of the EUT. Developed to hold a EUT in a free-space scenario any additional loading attributable to the material used in the construction of the positioner has been eliminated. Repeatability has been enhanced through the linear scales which form the design used to indicate positioning for any given test scenario in all major axes. A 15° tilt indicator is included for the of aid cheek to tilt movements for head SAR analysis. Overall uncertainty for measurements have been reduced due to the design of the Universal device positioner, which allows positioning of a device in as near to a free-space scenario as possible, and by providing the means for complete repeatability.

3.8 Phantom Types

The ALSAS-10U allows the integration of multiple phantom types. SAM Phantoms fully compliant with IEEE 1528, Universal Phantom, and Universal Flat.

APREL SAM Phantoms
The SAM phantoms developed using the IEEE SAM CAD file. They are fully compliant with the requirements for both IEEE 1528 and FCC Supplement C. Both the left and right SAM phantoms are interchangeable, transparent and include the IEEE 1528 grid with visible NF and MB lines.

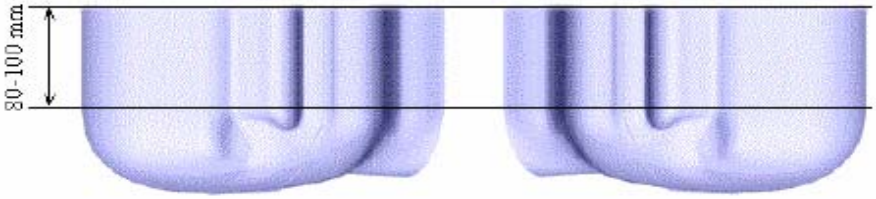

3.8.1 APREL Laboratories Universal Phantom

The Universal Phantom is used on the ALSAS-10U as a system validation phantom.The Universal Phantom has been fully validated both experimentally from 800MHz to 6GHz and numerically using XFDTD numerical software. The shell thickness is 2mm overall, with a 4mm spacer located at the NF/MB intersection providing an overall thickness of 6mm in line with the requirements of IEEE-1528.

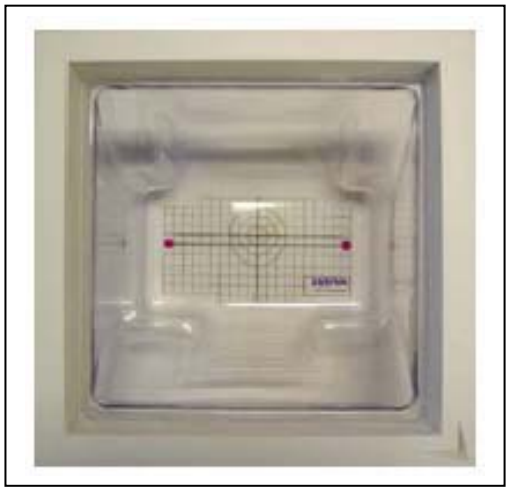

The design allows for fast and accurate measurements, of handsets, by allowing the conservative SAR to be evaluated at on frequency for both left and right head experiments in one measurement.

4. Tissue Simulating Liquid

4.1 The composition of the tissue simulating liquid

INGREDIENT (% Weight)	2450MHz Head	2450MHz Body		
Water	46.7	73.2		
Salt	0.00	0.40		
Sugar	0.00	0.00		
HEC	0.00	0.00		
Preventol	0.00	0.00		
DGBE	53.3	26.76		

4.2 Tissue Calibration Result

The dielectric parameters of the liquids were verified prior to the SAR evaluation using Agilent Dielectric Probe Kit and Agilent E5071B Vector Network Analyzer

<Data>

Head Tissue Simulant Measurement				
Frequency [MHz]	Description	Dielectric Parameters		Tissue Temp. [°C]
		ε_r	σ [s/m]	
2450MHz	Reference result ± 5% window	39.2 37.24 to 41.16	1.8 1.71 to 1.89	N/A
	03-May-2010	40.43	1.78	22.5

Body Tissue Simulant Measurement				
Frequency [MHz]	Description/ Calibration date	Dielectric Parameters		Tissue Temp. [°C]
		ε_r	σ [s/m]	
2450MHz	Reference result ± 5% window	52.7 50.065 to 55.335	1.95 1.8525 to 2.0475	N/A
	03-May-2010	52.19	2.01	22.5

4.3 Tissue Dielectric Parameters for Head and Body Phantoms

The head tissue dielectric parameters recommended by the IEEE SCC-34/SC-2 in P1528 have been incorporated in the following table. These head parameters are derived from planar layer models simulating the highest expected SAR for the dielectric properties and tissue thickness variations in a human head. Other head and body tissue parameters that have not been specified in P1528 are derived from the tissue dielectric parameters computed from the 4-Cole-Cole equations described in Reference [12] and extrapolated according to the head parameters specified in P1528.

Target Frequency	Head		Body	
(MHz)	ε_r	σ (S/m)	ε_r	σ (S/m)
150	52.3	0.76	61.9	0.80
300	45.3	0.87	58.2	0.92
450	43.5	0.87	56.7	0.94
835	41.5	0.90	55.2	0.97
900	41.5	0.97	55.0	1.05
915	41.5	0.98	55.0	1.06
1450	40.5	1.20	54.0	1.30
1610	40.3	1.29	53.8	1.40
1800 – 2000	40.0	1.40	53.3	1.52
2450	39.2	1.80	52.7	1.95
3000	38.5	2.40	52.0	2.73
5800	35.3	5.27	48.2	6.00

(ε_r = relative permittivity, σ = conductivity and ρ = 1000 kg/m^3)

5. SAR Measurement Procedure

5.1 SAR System Validation

5.1.1 Validation Dipoles

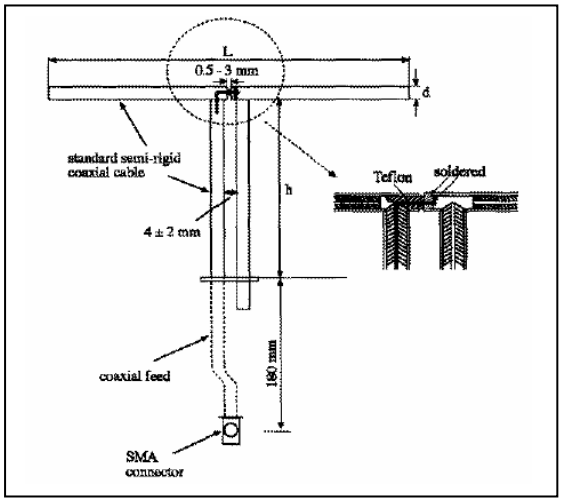

The dipoles used is based on the IEEE-1528 standard, and is complied with mechanical and electrical specifications in line with the requirements of both IEEE and FCC Supplement C. the table below provides details for the mechanical and electrical specifications for the dipoles.

*	Frequency	L (mm)	h (mm)	d (mm)
	835MHz	161.0	89.8	3.6
	900MHz	149.0	83.3	3.6
	1800MHz	72.0	41.7	3.6
	1900MHz	68.0	39.5	3.6
v	2450MHz	51.5	30.4	3.6
	5200MHz	23.6	14.0	3.6
	5800MHz	21.6	12.6	3.6

*Note: “V” indicates Frequency used of EUT

5.1.2 Validation Result

<Data>

System Performance Check at 2450MHz
Validation Kit: ASL-D-2450-S-2

Frequency [MHz]	Description	SAR [w/kg] 1g	SAR [w/kg] 10g	Tissue Temp. [°C]
2450 MHz	Reference result ± 5% window	53.1 50.44 to 55.75	24.4 23.18 to 25.62	N/A
	03-May-2010	51.84	23.2	22.5

Note: All SAR values are normalized 1W.

5.2 Arrangement Assessment Setup

5.2.1 Test Positions of Device Relative to Head

This specifies exactly two test positions for the handset against the head phantom, the "cheek" position and the "tilted" position. The handset should be tested in both positions on the left and right sides of the SAM phantom. If the handset construction is such that it cannot be positioned using the handset positioning procedures described in 4.2.2.1 and 4.2.2.2 to represent normal use conditions (e.g., asymmetric handset), alternative alignment procedures should be considered with details provided in the test report.

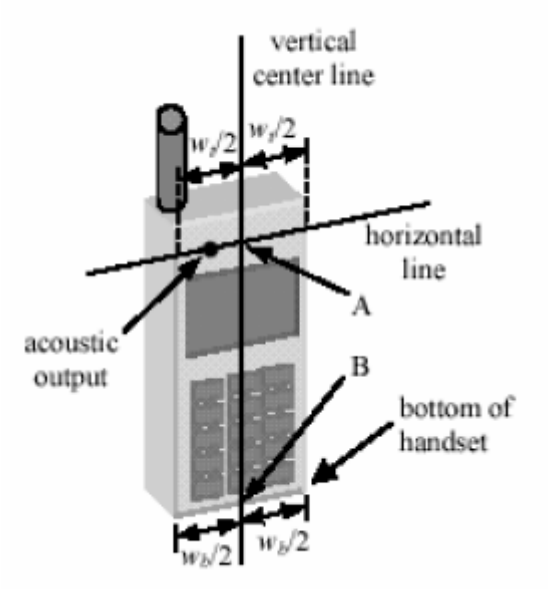

Figure 4.1a Fixed Case

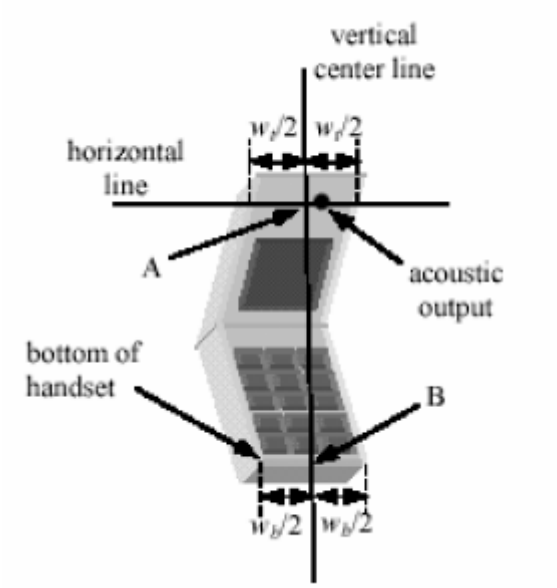

Figure4.1b Clam Shell

5.2.2 Definition of the "Cheek" Position

The "cheek" position is defined as follows:

a. Ready the handset for talk operation, if necessary. For example, for handsets with a cover piece, open the cover. (If the handset can also be used with the cover closed both configurations must be tested.)

b. Define two imaginary lines on the handset: the vertical centerline and the horizontal line. The vertical centerline passes through two points on the front side of the handset: the midpoint of the width *wt* of the handset at the level of the acoustic output (point A on Figures 4.1a and 4.1b), and the midpoint of the width *wb* of the bottom of the handset (point B). The horizontal line is perpendicular to the vertical centerline and passes through the center of the acoustic output (see Figure 4.1a). The two lines intersect at point A. Note that for many handsets, point A coincides with the center of the acoustic output. However, the acoustic output may be located elsewhere on the horizontal line. Also note that the vertical centerline is not necessarily parallel to the front face of the handset (see Figure 4.1b), especially for clamshell handsets, handsets with flip pieces, and other irregularly-shaped handsets.

c. Position the handset close to the surface of the phantom such that point A is on the (virtual) extension of the line passing through points RE and LE on the phantom (see Figure 4.2), such that the plane defined by the vertical center line and the horizontal line of the handset is approximately parallel to the sagittal plane of the phantom.

d. Translate the handset towards the phantom along the line passing through RE and LE until the handset touches the pinna.

e. While maintaining the handset in this plane, rotate it around the LE-RE line until the vertical centerline is in the plane normal to MB-NF including the line MB (called the reference plane).

f. Rotate the handset around the vertical centerline until the handset (horizontal line) is symmetrical with respect to the line NF.

g. While maintaining the vertical centerline in the reference plane, keeping point A on the line passing through RE and LE and maintaining the handset contact with the pinna, rotate the handset about the line NF until any point on the handset is in contact with a phantom point below the pinna (cheek). See Figure 4.2 the physical angles of rotation should be noted.

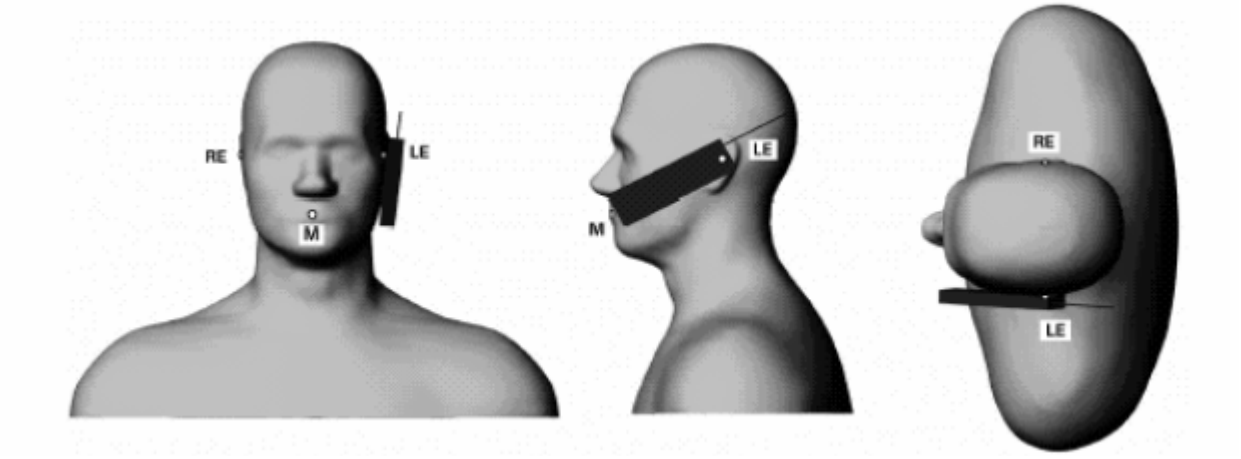

Figure 4.2 – Phone position 1, “cheek” or “touch” position.

5.2.3 Definition of the "Tilted" Position

The "tilted" position is defined as follows:

a. Repeat steps (a) – (g) of 4.2.1.1 to place the device in the "cheek position."

b. While maintaining the orientation of the handset move the handset away from the pinna along the line passing through RE and LE in order to enable a rotation of the handset by 15 degrees.

c. Rotate the handset around the horizontal line by 15 degrees.

d. While maintaining the orientation of the handset, move the handset towards the phantom on a line passing through RE and LE until any part of the handset touches the ear. The tilted position is obtained when the contact is on the pinna. If the contact is at any location other than the pinna (e.g., the antenna with the back of the phantom head), the angle of the handset should be reduced. In this case, the tilted position is obtained if any part of the handset is in contact with the pinna as well as a second part of the handset is contact with the phantom (e.g., the antenna with the back of the head).

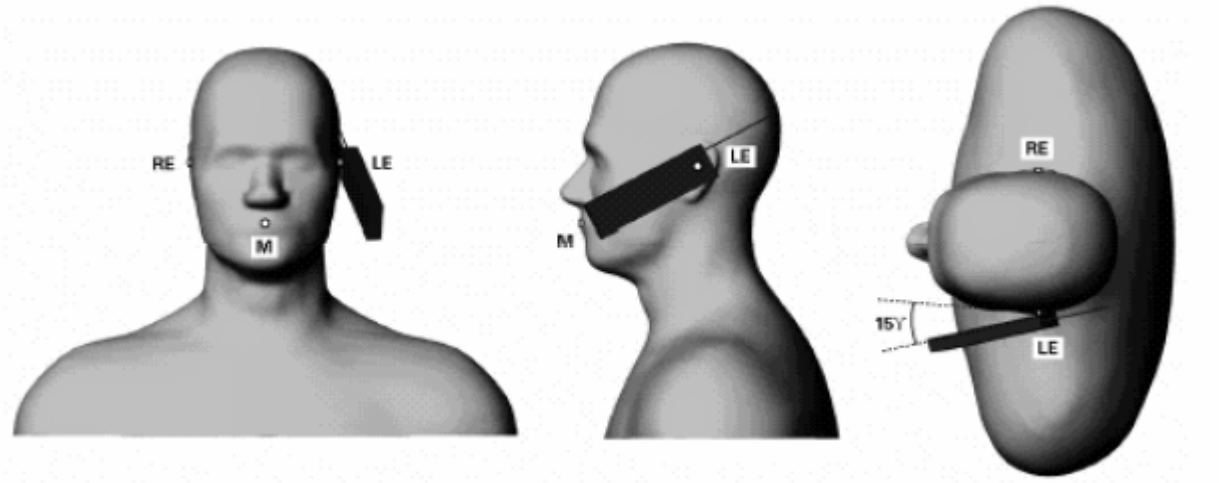

Figure 4.3 – Phone position 2, "tilted" position.

5.2.4 Test Positions for body-worn

Body-worn operating configurations should be tested with the belt-clips and holsters attached to the device and positioned against a flat phantom in normal use configurations. A separation distance of 1.5 cm between the back of the device and a flat phantom is recommended for testing body-worn SAR compliance under such circumstances. Other separation distance may be use, but not exceed 2.5 cm.

5.3 SAR Measurement Procedure

The ALSAS-10U calculates SAR using the following equation,

$$SAR = \frac{\sigma |E|^2}{\rho}$$

σ: represents the simulated tissue conductivity
ρ: represents the tissue density

The EUT is set to transmit at the required power in line with product specification, at each frequency relating to the LOW, MID, and HIGH channel settings.

Pre-scans are made on the device to establish the location for the transmitting antenna, using a large area scan in either air or tissue simulation fluid.

The EUT is placed against the Universal Phantom where the maximum area scan dimensions are larger than the physical size of the resonating antenna. When the scan size is not large enough to cover the peak SAR distribution, it is modified by either extending the area scan size in both the X and Y directions, or the device is shifted within the predefined area.

The area scan is then run to establish the peak SAR location (interpolated resolution set at $1mm^2$) which is then used to orient the center of the zoom scan. The zoom scan is then executed and the 1g and 10g averages are derived from the zoom scan volume (interpolated resolution set at $1mm^3$).

6. SAR Exposure Limits

SAR assessments have been made in line with the requirements of IEEE-1528, FCC Supplement C, and comply with ANSI/IEEE C95.1-1992 “Uncontrolled Environments” limits. These limits apply to a location which is deemed as “Uncontrolled Environment” which can be described as a situation where the general public may be exposed to an RF source with no prior knowledge or control over their exposure.

Limits for General Population/Uncontrolled Exposure (W/kg)

Type Exposure	Uncontrolled Environment Limit
Spatial Peak SAR (1g cube tissue for brain or body)	1.60 W/kg
Spatial Average SAR (whole body)	0.08 W/kg
Spatial Peak SAR (10g for hands, feet, ankles and wrist)	4.00 W/kg

7. Test Equipment List

Instrument	Manufacturer	Model No.	Serial No.	Last Calibration
Vector Network Analyzer	Agilent	E5071B	MY42402726	06/12/2008
Dielectric Probe Kit	Aglient	85070E	MY44300124	N/A
Vector Signal Generator	R&S	SMU200A	102330	06/18/2009
Power Meter	Agilent	E4418B	GB41299009	06/16/2009
Power Sensor	Agilent	84815A	3318A01828	11/13/2009
Data Acquisition Package	Aprel	ALS-DAQ-PAQ-2	110-00212	NA
Aprel Laboratories Probe	Aprel	ALS-E020	266	04/26/2010
Aprel Reference Dipole 2450MHz	Aprel	ALS-D-2450-S-2	220-00753	02/05/2009
Boundary Detection Sensor System	Aprel	ALS-PMDPS-2	120-00253	N/A
Universal Work Station	Aprel	ALS-UWS	100-00153	N/A
Device Holder 2.0	Aprel	ALS-H-E-SET-2	170-00503	N/A
Left Ear SAM Phantom	Aprel	ALS-P-SAM-L	130-00305	N/A
Right Ear SAM Phantom	Aprel	ALS-P-SAM-R	140-00355	N/A
Universal Phantom	Aprel	ALS-P-UP-1	150-00405	N/A
Aprel Dipole Spacer	Aprel	ALS-DS-U	250-00903	N/A
SAR Software	Aprel	ALSAS-10U Ver.2.2.0	B0D5F-112FE	N/A
CRS C500C Controller	Thermo	ALS-C500	RCF0440278	N/A
CRF F3 Robot	Thermo	ALS-F3	RAF0440252	N/A
Power Amplifier	Mini-Circuit	ZVE-8G	D030305	N/A

Note: All equipment upon which need to be calibrated are with calibration period of 1 year.

8. Measurement Uncertainty

Exposure Assessment Measurement Uncertainty

Source of Uncertainty	Tolerance Value	Probability Distribution	Divisor	c_i^1 (1g)	c_i^1 (10g)	Standard Uncer-tainty (1-g) %	Standard Uncer-tainty (10g) %
Measurement System							
Probe Calibration	3.5	normal	1	1	1	3.5	3.5
Axial Isotropy	3.7	rectangular	√3	$(1-cp)^{1/2}$	$(1-cp)^{1/2}$	1.5	1.5
Hemispherical Isotropy	10.9	rectangular	√3	√cp	√cp	4.4	4.4
Boundary Effect	1.0	rectangular	√3	1	1	0.6	0.6
Linearity	4.7	rectangular	√3	1	1	2.7	2.7
Detection Limit	1.0	rectangular	√3	1	1	0.6	0.6
Readout Electronics	1.0	normal	1	1	1	1.0	1.0
Response Time	0.8	rectangular	√3	1	1	0.5	0.5
Integration Time	1.7	rectangular	√3	1	1	1.0	1.0
RF Ambient Condition	3.0	rectangular	√3	1	1	1.7	1.7
Probe Positioner Mech.	0.4	rectangular	√3	1	1	0.2	0.2
Restriction							
Probe Positioning with respect to Phantom Shell	2.9	rectangular	√3	1	1	1.7	1.7
Extrapolation and Integration	3.7	rectangular	√3	1	1	2.1	2.1
Test Sample Positioning	4.0	normal	1	1	1	4.0	4.0
Device Holder Uncertainty	2.0	normal	1	1	1	2.0	2.0
Drift of Output Power	1.6	rectangular	√3	1	1	0.9	0.9
Phantom and Setup							
Phantom Uncertainty (shape & thickness tolerance)	3.4	rectangular	√3	1	1	2.0	2.0
Liquid Conductivity (target)	5.0	rectangular	√3	0.7	0.5	2.0	1.4
Liquid Conductivity(meas.)	4.6	normal	1	0.7	0.5	3.2	2.3
Liquid Permittivity(target)	5.0	rectangular	√3	0.6	0.5	1.7	1.4
Liquid Permittivity(meas.)	2.3	normal	1	0.6	0.5	1.4	1.1
Combined Uncertainty		RSS				9.9	9.5
Combined Uncertainty (coverage factor=2)		Normal(k=2)				19.8	18.9

9. Test Result Summary

9.1 802.11b Test Result

SAR Measurement										
Ambient Temperature (°C) :23				*Relative Humidity (%): 60*						
Liquid Temperature (°C) : 22.5				*Depth of Liquid (cm):>15*						
Test Mode : 802.11b										
Test Position of EUT	Antenna Type	Frequency		Analyzer Reading (dBm)	Cable Loss (dB)	Peak Power Output (mW)	Pear power Output (dBm)	Limit (dBm)	SAR 1g (W/kg)	Limit (W/Kg)
		Channel	MHz							
Channel 1	Internal	Low	2412	19.27	1.1	108.89	20.37	30		1.6
Channel 6	Internal	Mid	2437	19.48	1.1	114.29	20.58	30		1.6
Channel 11	Internal	High	2462	20.03	1.1	129.72	21.13	30	0.042	1.6

Note: The SAR measured at the middle channel for this configuration is at least 3 dB lower than SAR limit, testing at the high and low channels is option.

9.2 802.11g Test Result

SAR Measurement										
Ambient Temperature (°C) : 23				*Relative Humidity (%):60*						
Liquid Temperature (°C) : 22.5				*Depth of Liquid (cm):>15*						
Test Mode : 802.11g										
Test Position of EUT	Antenna Type	Frequency		Analyzer Reading (dBm)	Cable Loss (dB)	Peak Power Output (mW)	Pear power Output (dBm)	Limit (dBm)	SAR 1g (W/kg)	Limit (W/Kg)
		Channel	MHz							
Channel 1	Internal	Low	2412	20.9	1.1	158.49	22	30		1.6
Channel 6	Internal	Mid	2437	24.12	1.1	332.66	25.22	30	0.022	1.6
Channel 11	Internal	High	2462	21.99	1.1	203.70	23.09	30		1.6

Note: The SAR measured at the middle channel for this configuration is at least 3 dB lower than SAR limit, testing at the high and low channels is option.

9.3 802.11n HT20 Test Result

SAR Measurement										
Ambient Temperature (°C) :23				*Relative Humidity (%): 60*						
Liquid Temperature (°C) : 22.5				*Depth of Liquid (cm):>15*						
Test Mode : 802.11n HT20										
Test Position of EUT	Antenna Type	Frequency		Analyzer Reading (dBm)	Cable Loss (dB)	Peak Power Output (mW)	Pear power Output (dBm)	Limit (dBm)	SAR 1g (W/kg)	Limit (W/Kg)
		Channel	MHz							
Channel 1	Internal	Low	2412	19.93	1.1	126.77	21.03	30		1.6
Channel 6	Internal	Mid	2437	24.17	1.1	336.51	25.27	30	0.037	1.6
Channel 11	Internal	High	2462	20.89	1.1	158.12	21.99	30		1.6

Note: The SAR measured at the middle channel for this configuration is at least 3 dB lower than SAR limit, testing at the high and low channels is option.

9.4 802.11n HT40 Test Result

SAR Measurement										
Ambient Temperature (°C) : 23				*Relative Humidity (%):60*						
Liquid Temperature (°C) : 22.5				*Depth of Liquid (cm):>15*						
Test Mode : 802.11n HT40										
Test Position of EUT	Antenna Type	Frequency		Analyzer Reading (dBm)	Cable Loss (dB)	Peak Power Output (mW)	Pear power Output (dBm)	Limit (dBm)	SAR 1g (W/kg)	Limit (W/Kg)
		Channel	MHz							
Channel 3	Internal	Low	2422	16.53	1.1	57.94	17.63	16.53		1.6
Channel 6	Internal	Mid	2437	20.84	1.1	156.31	21.94	20.84	0.026	1.6
Channel 9	Internal	High	2452	16.47	1.1	57.15	17.57	16.47		1.6

Note: The SAR measured at the middle channel for this configuration is at least 3 dB lower than SAR limit, testing at the high and low channels is option.

10. Appendix A: Photographs of Test Setup

11. Appendix B: Photographs of EUT

(refer to ISL-10LR014P)

12. Appendix C: SAR System Validation Data

13. Appendix D: SAR Measurement Data

14. Appendix E: Probe Calibration Data

15. Appendix F: Dipole Calibration Data