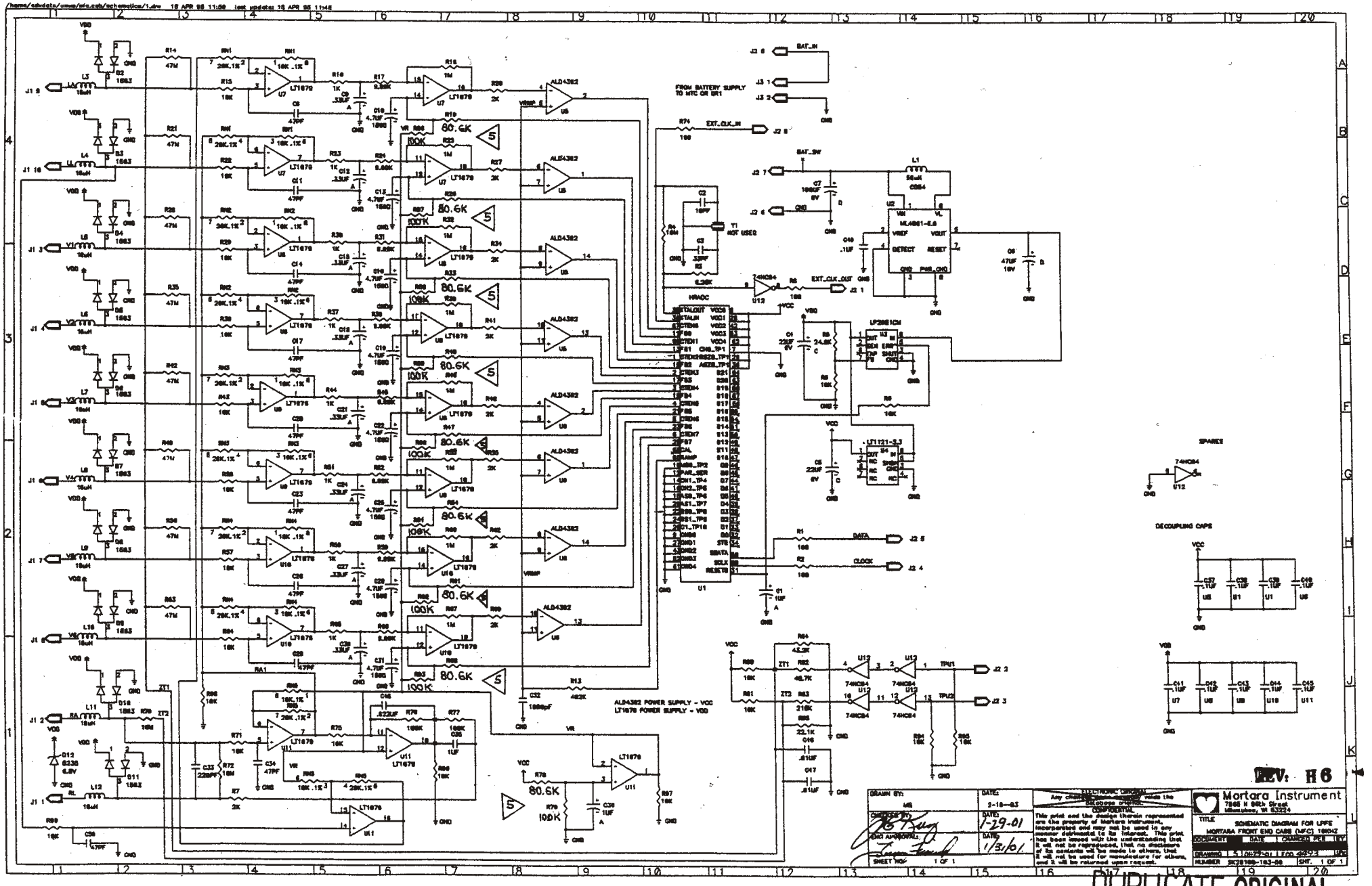
FROM BATTERY SUPPLY TO MTC OR BR1
BAT_IN
EXT_CLK_IN
EXT_CLK_OUT
BAT_SW
HRADC
DATA
CLOCK
TPU1
TPU2
SPARES
DECOUPLING CAPS
ALD4382 POWER SUPPLY - VCC
LT1679 POWER SUPPLY - VDD
80.6K
100K
REV: H6
Mortara Instrument
SCHEMATIC DIAGRAM FOR UFE
MORTARA FRONT END CARD (MFC) 16KHZ
DRAWN BY:
DATE:
2-16-03
1-29-01
1/31/01
SHEET NO: 1 OF 1
DRAWING NUMBER
SHT. 1 OF 1
DUPLICATE ORIGINAL