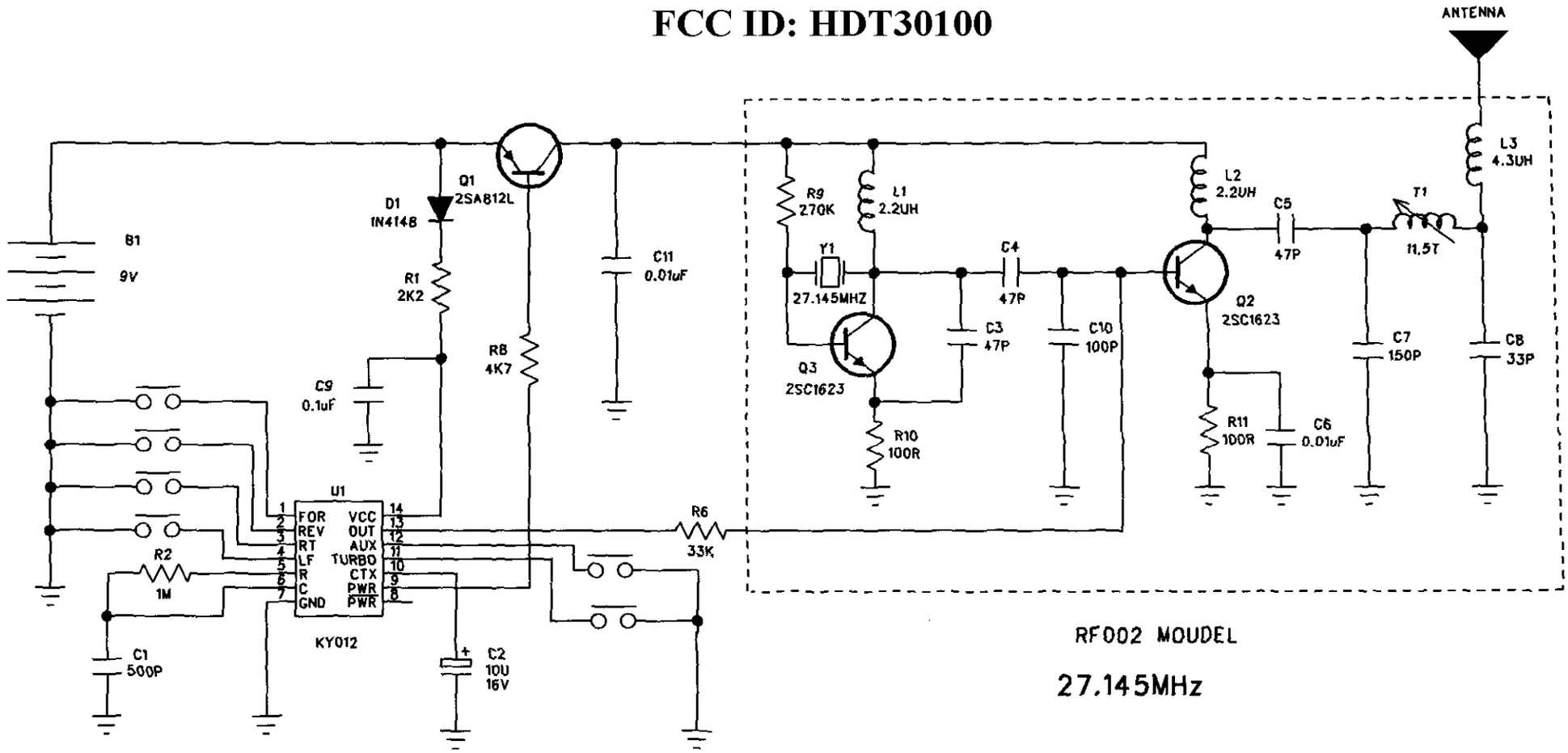FCC ID: HDT30100