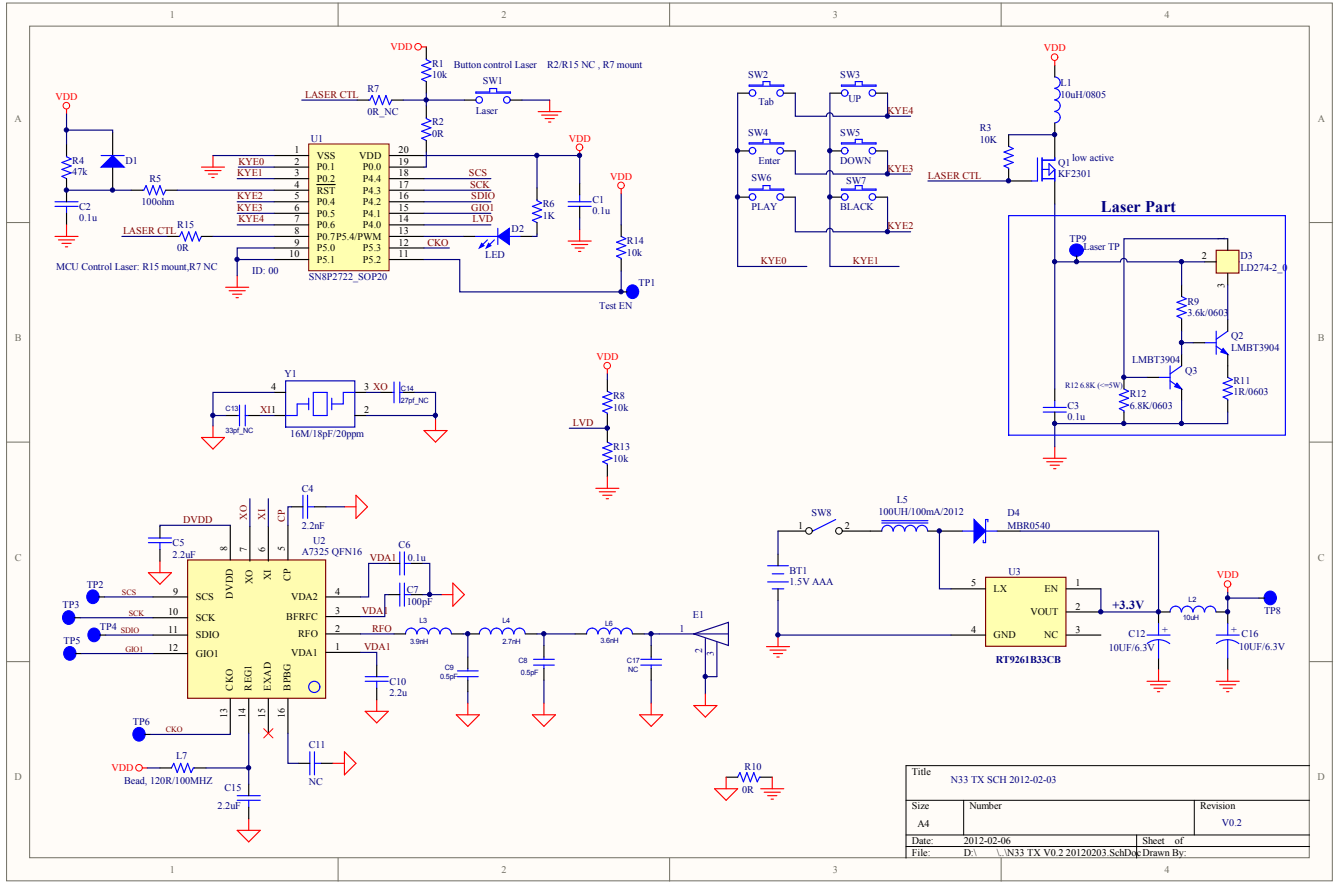
VDD
R1 10k
Button control Laser
R2/R15 NC , R7 mount
LASER CTL
R7 0R_NC
SW1 Laser
R2 0R
U1
VSS VDD
P0.1 P0.0
P0.2 P4.4
RST P4.3
P0.4 P4.2
P0.5 P4.1
P0.6 P4.0
P0.7/P5.4/PWM
P5.0 P5.3
P5.1 P5.2
KYE0
KYE1
KYE2
KYE3
KYE4
SCS
SCK
SDIO
GIO1
LVD
CKO
SN8P2722_SOP20
R4 47k
D1
R5 100ohm
C2 0.1u
R15 0R
MCU Control Laser: R15 mount,R7 NC
ID: 00
R6 1K
D2 LED
C1 0.1u
R14 10k
TP1
Test EN
SW2 Tab
SW3 UP
SW4 Enter
SW5 DOWN
SW6 PLAY
SW7 BLACK
KYE4
KYE3
KYE2
KYE0
KYE1
L1 10uH/0805
R3 10K
Q1 KF2301
low active
Laser Part
TP9 Laser TP
D3 LD274-2_0
R9 3.6k/0603
Q2 LMBT3904
LMBT3904 Q3
R11 1R/0603
R12 6.8K (<=5W)
R12 6.8K/0603
C3 0.1u
Y1
C19 33pf_NC
XI1
XO
C14 27pf_NC
16M/18pF/20ppm
R8 10k
R13 10k
C4 2.2nF
DVDD
C5 2.2uF
U2 A7325 QFN16
C6 0.1u
C7 100pF
VDA1
RFO
TP2
TP3
TP4
TP5
TP6
SCS
SCK
SDIO
GIO1
CKO
L3 3.5nH
L4 2.7nH
L6 3.6nH
C9 0.5pF
C8 0.5pF
C17 NC
E1
C10 2.2u
C11 NC
L7 Bead, 120R/100MHZ
C15 2.2uF
R10 0R
SW8
L5 100UH/100mA/2012
D4 MBR0540
BT1 1.5V AAA
U3
LX EN
VOUT
GND NC
RT9261B33CB
+3.3V
L2 10uH
C12 10UF/6.3V
C16 10UF/6.3V
TP8
Title
N33 TX SCH 2012-02-03
Size
A4
Number
Revision
V0.2
Date: 2012-02-06
Sheet of
File: D:\ \N33 TX V0.2 20120203.SchDoc
Drawn By: