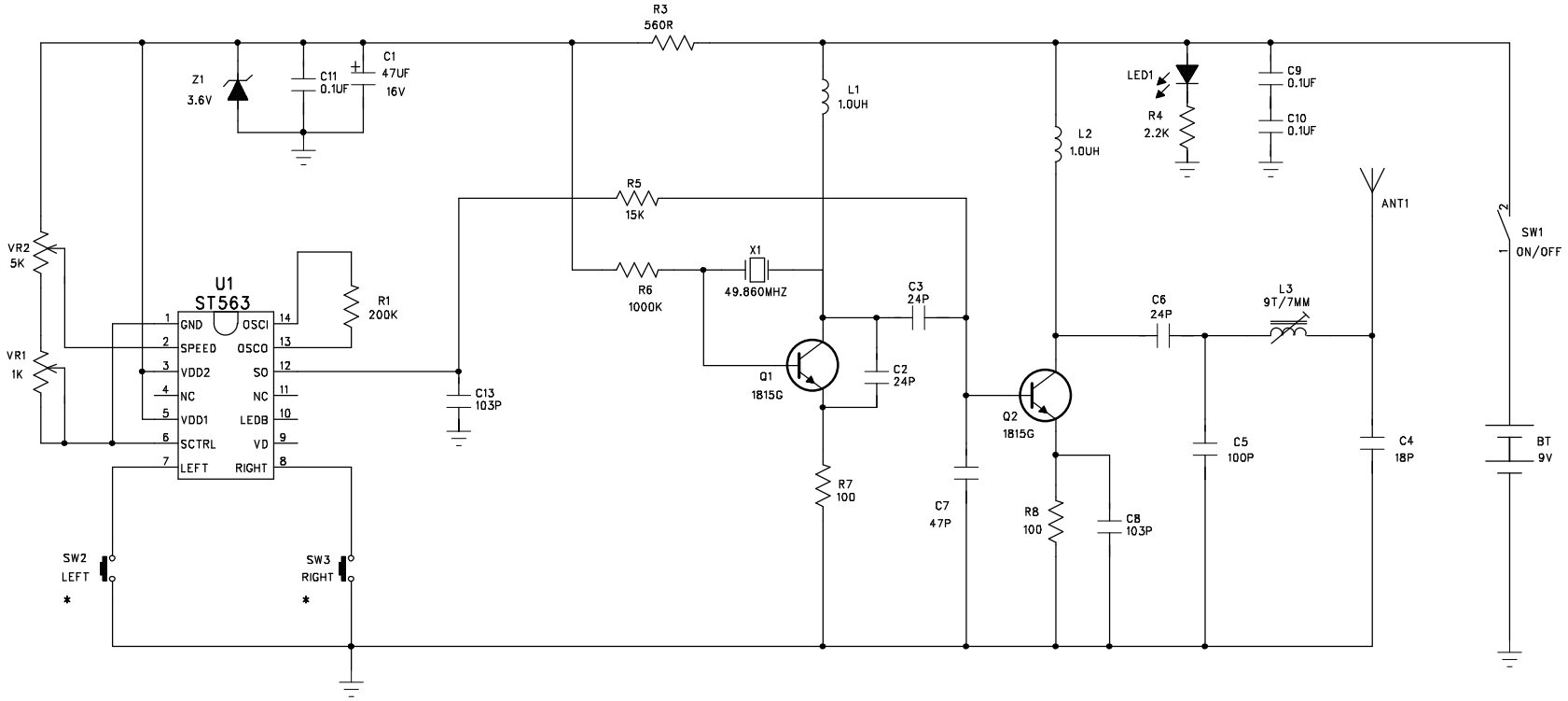

* UNUSED

ECHO TOYS LTD		
TITLE: SCHEMATIC CIRCUIT		90448
DRAWING NO: EE-90448T49-SF		TX-49
DRAWN: Angel	DATED: 23 Jun 05	REV: 00
CHECKED:	DATED:	SHEET: 1 OF 1

PDF created with pdfFactory trial version www.pdffactory.com