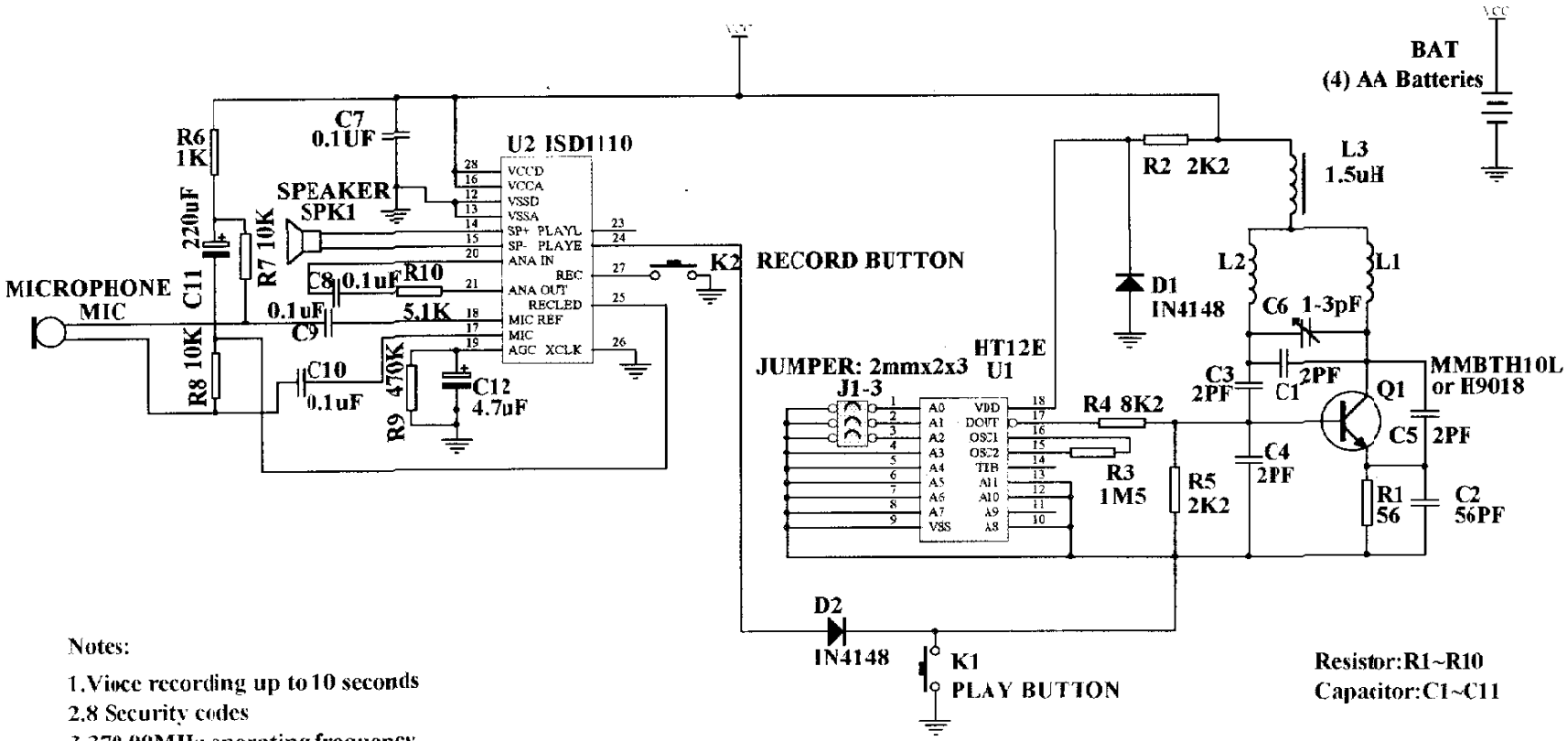

Notes:

1.Vioce recording up to 10 seconds
2.8 Security codes
3.370.00MHz operating frequency

Resistor:R1~R10
Capacitor:C1~C11

Title	WIRELESS FUN CHIME (TRANSMITTER)	
Size A4	Number #1210/#1211	Revision B
Date: 14-Nov-2000	Sheet of	
File: D:\win98\lyx\FILES DOCUMENTS\[illegible]ids chimes(T).Ddb		