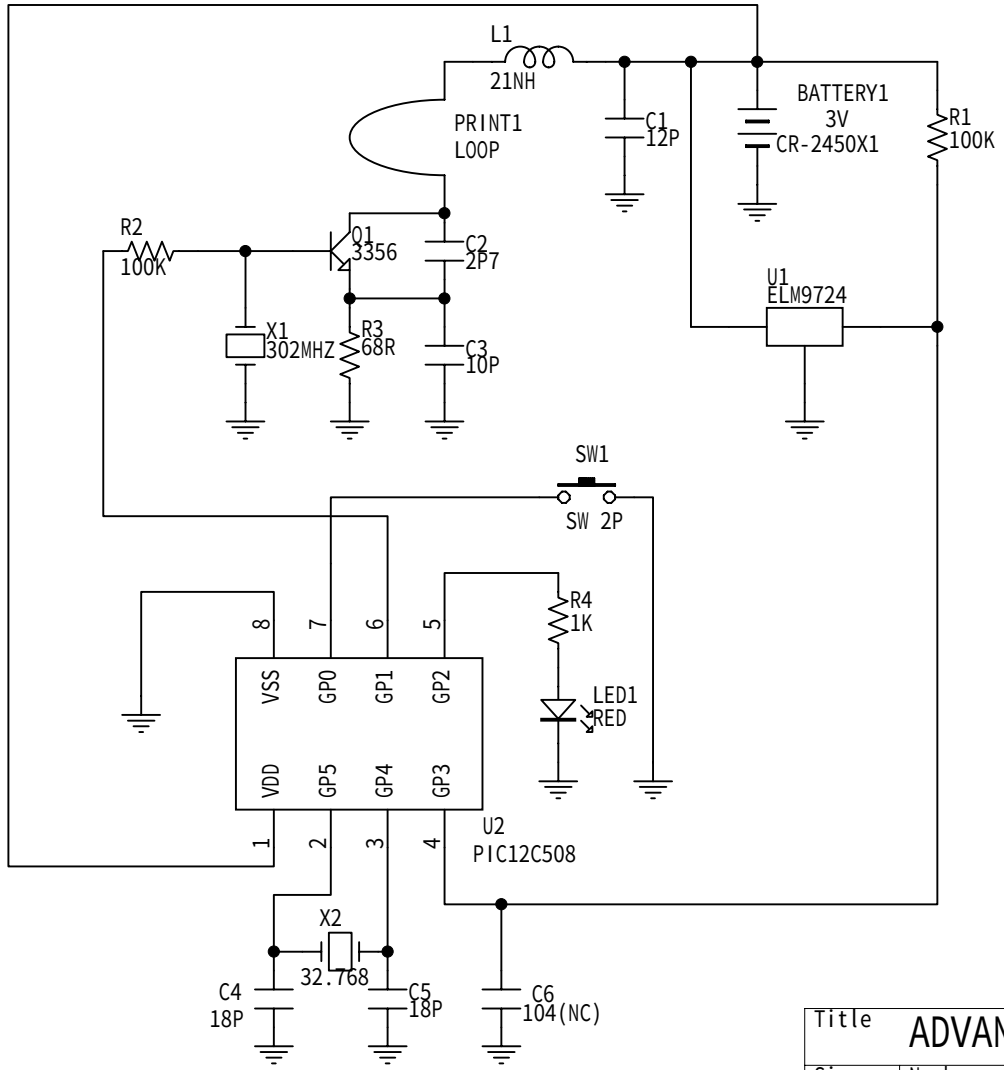

Title	ADVANCE SECURITY INC.		
Size A4	Number SLRF10(FCC)		Revision 1
Date: 10-Aug-2004		Sheet of	
File: D:\DDB檔案\TX\SLRF10.ddb		Drawn By:	