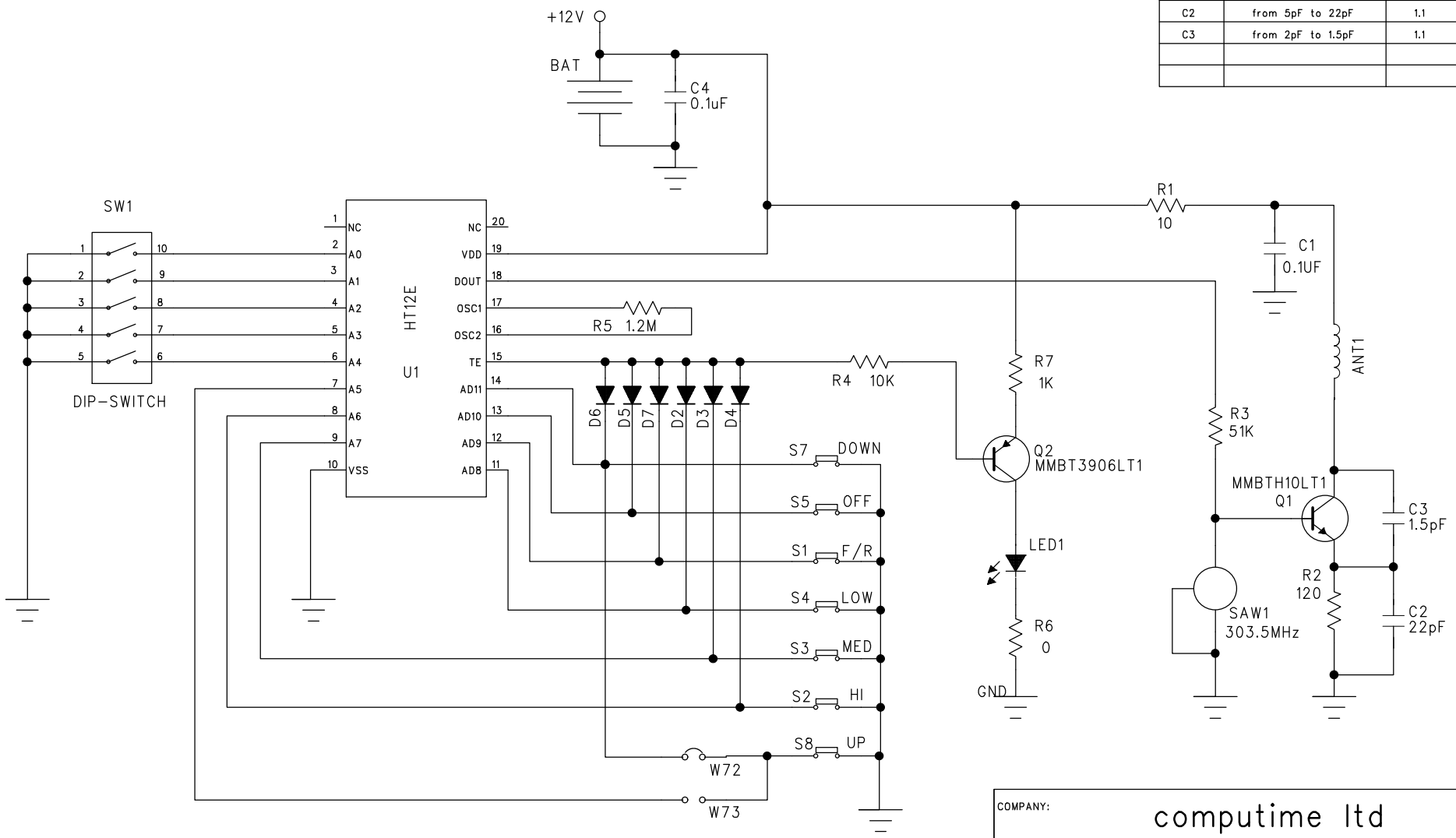

REVISION RECORD			
Ref.	Changed	Rev.	DATE:
C2	from 5pF to 22pF	1.1	Sep16,03
C3	from 2pF to 1.5pF	1.1	Sep16,03

	HUNBW72	HUNBW73
W72	SHORT	OPEN
W73	OPEN	SHORT
D1	WITHOUT	WITH

DRAWN: ZJ Li	DATED: Sep 16, 2003
CHECKED:	DATED:
QUALITY CONTROL:	DATED:
RELEASED:	DATED:

COMPANY: computime ltd

TITLE: W72 RF transmitter FAN LIGHT CONTROL

CODE:	SIZE:	DRAWING NO:	REV:
			1.1

SCALE:

SHEET: 1 OF 1